ILLINOIS DEPARTMENT OF NATURAL RESOURCES

Office of Oil and Gas Resource Management
One Natural Resources Way Springfield, Illinois 62702-1271

HIGH VOLUME HORIZONTAL HYDRAULIC FRACTURING PERMIT APPLICATION HVHHF-10

References to "1-xx" or "§1-xx" are to the Hydraulic Fracturing Regulatory Act., 225 ILCS 732/1-1 et seq. References to "240.xxx" and "245.xxx" are to 62 Ill. Admin. Code 240 and 245, respectively.

Attachment: ContainmentPlan

Please save attachment and use the file name above.

Containment Plan §1-35(b)(13); 245.210(a)(13), 245.820, 245.825, 245.830.
Describe the containment practices and equipment to be used and the area of the well site where containment systems will be employed. If any part of the well or well site is in an area identified by the U.S. Geological Service as having a 2% or greater probability of exceedance in 50 years of peak ground acceleration of 0.4 standard gravity or more, identify measures you will take to protect the components in this plan against earthquakes of M4.5 or more. *NOTE: review 245.820; also locate the containment systems on the overhead sketch required under section (g) of the WellSiteSetbackPlan.*

WOOLSEY OPERATING COMPANY, LLC
125 NORTH MARKET, SUITE 1000, WICHITA, KANSAS 67202-1775
(316) -267-4379 FAX (316) 267-4383

Woolsey Operating Company, LLC
Woodrow #1H-310408-193
White County, Illinois
High Volume Horizontal Hydraulic Fracturing Permit Application
HVHHF-10: Containment Plan

The operator plans to have a minimum amount of "fracturing fluid" within the common containment area. The fracturing fluid will be mixed on-the-fly just ahead of the well head. The constituent chemicals used in the makeup of the "fracturing fluid" will be stored in above ground tanks that meet the requirements set out in 245.825, 245.910 and Section 1-75(c)(4) of the Act, see attached chemical tote tank specifications. Tanks containing these chemicals will be stored within a diked containment capable of holding 150% of the total volume of the single largest container or tank within a common containment area. Tanks containing hydraulic fracturing fluid will be constructed of steel with a sufficient pressure rating and maintained in a leak-free condition and will be lined with a material resistant to; corrosion, erosion, swelling, deterioration or other damage as a result of exposure to the flow back fluids, see attachment of bi-level coated tank. The tanks will be inspected routinely for corrosion. Tanks containing constituent chemicals used in the hydraulic fracturing fluid are provided by the chemical manufacturer and meet...No more than one (1) hour prior to initiating fracturing operations the secondary containment facilities and structures will be visually inspected for integrity. No stationary fueling tanks will be used.

During flow back operations the tanks located within the area of the wellsite will also be surrounded by a dike capable of holding 150% of the total volume of the single largest container or tank within a common secondary containment area. The secondary containment will be inspected as required by 245.820.

The wellsite lies outside of the area identified by the U.S. Geological Survey as having a 2% or greater probability of exceedance in 50 years of ground acceleration of 0.4 standard gravity or more.

MX-EX

ECOBULK MX-EX antistatic

SCHÜTZ INDUSTRIAL PACKAGING
The Future's Technology. Today.

www.schuetz.net

Safe in ex-zones.
The antistatic ECOBULK MX-EX.

- Suitable for utilisation on explosive endangered operation premises classified as zone 1 and zone 2 (while complying with statutory and company-specific safety precautions and regulations)
- The antistatic outer layer protects the container from hazardous electrostatic charge
- The earthed outlet valve discharges the electrostatic charge of the filling product
- Electrostatically safe within the context of the Cenelec Report CENELEC TR50404 (2003) and TRBS 2153

Please do not hesitate to contact us regarding any technical concerns or questions.

MATERIAL

Inner bottle

- Inner and intermediate layer: high-molecular, high-density polyethelene (HDPE)
- Antistatic outer layer
- Additional UV and light protection of the filling product (optional)

Outer container

- Welded tubular steel grid, galvanized

Bottom plate

- Made of steel plate to provide stability and to facilitate minimum residual contents from the inner container

PALLETS (4-way entry)

steel frame

steel skid

CERTIFICATIONS

UN 31 HA1/Y (optional)

- Maximum density 1.6
- Tested for electrostatic safety
- Suitable for use in ex-zones 1 & 2

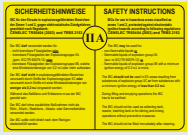

IIA

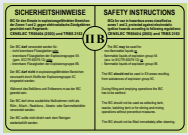

IIB (optional)

FDA (optional)

- Safe for food products

CAPACITY

MX-EX antistatic 1000

- 1,000 litres (275 gal)

OUTLET VALVES

- Earthed screwable butterfly valve DN 50

FILLING OPENING

- DN 150 with screw cap
- DN 225 with screw cap

DYNAMIC LOAD

Filled ECOBULK according to the specific weight of the filling goods

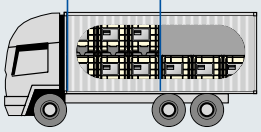

DIMENSIONS

- 1,200 x 1,000 x 1,160 (L x W x H)

WEIGHT

MX-EX 1000

- 57 kg with steel pallet

STATIC LOAD

Max. 4-high

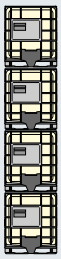

IBC Handling Guide

SCHÜTZ ECOBULK MX 1000 UN –
For Use with Hazardous Filling Goods

Design type test descriptions

Bottom Lift Test

The filled IBC with a load that is 1.25 times the maximum permissible gross mass is raised and lowered by a forklift truck with the forks centrally positioned and penetrate to three quarters of direction of entry.

Criteria for passing the test
No deformation which renders the IBC including base pallet unsafe for transport and no loss of content.

Stacking Test

The IBC is filled with the maximum permissible gross mass and is placed on level hard ground. Then a load is placed on top of the IBC for a period of 24 hours.

Criteria for passing the test
No permanent deformation which renders the IBC including base pallet unsafe for transport and no loss of content.

Design type test descriptions

Leakproof Test

The IBC is tested for a period of at least 10 minutes using air under a gauge pressure of min. 20kPa. The air tightness of the IBC shall be determined by a suitable method (e.g. immersing the IBC in water).

Criteria for passing the test
No leakage of air.

Hydraulic Pressure Test

The IBC is tested for a period of at least 10 minutes applying a hydraulic pressure of min. 100kPa. The IBC shall not be mechanically restrained during the test.

Criteria for passing the test
No leakage and no deformation which would render the IBC unsafe for transport.

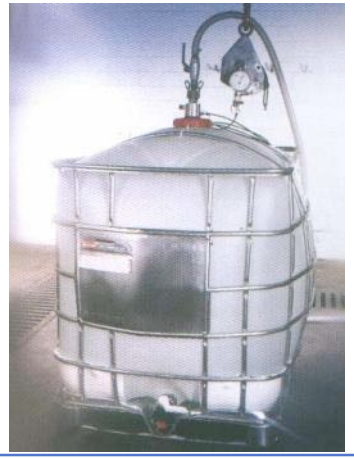

Design type test descriptions

Cold Drop Test

The IBC is filled to not less than 98% of its maximum capacity for liquids. The testing is carried out when the temperature of the IBC and its contents has been reduced to minus 18°C or lower. The IBC is then dropped from a height of maximum 1,9 m to its weakest structural point.

Vibration Test

This test applies to design types for IBCs manufactured as from 1 January 2011.

The IBC is filled to not less than 98% of its maximum capacity for liquids and then placed in the centre of the test machine platform with a vertical sinusoidal, double amplitude of 25mm +/- 5%. The test is carried out over a period of one hour.

Criteria for passing the test
No leakage or rupture shall be observed. In addition, no breakage or failure of structural components, such as broken welds or field fastenings, shall be observed.

Basic information on the label plate

Standard label

0208 / 0208	First visual check and first leakproof test
4006230	Article number
MX1000	IBC type
17.02.08	Production date
S1	Production location
B	Shift number
58	Number of IBC per order
1011178787	intern production-/ order number

UN - marking example

31HA1	Coding system for the identification of the IBC
Y	Packaging group
MMYY	Production date (month and year)
D	State authorizing the allocation
BAM0380	UN approval number
SCHÜTZ1	Production location
4056	Max. Stacking weight in kg
2037	Max. Gross weight in kg
1060l	Max. Overflow volume in litre
60kg	Approved weight in kg (valid for all types of the approval)
100kPa	Test pressure in kPa

Steel Tank

Bi-Level Coated

Overview:

21,000 gallon bi-level tanks from Rain for Rent have a standard "V" shaped floor for ease of draining all stored liquids completely through a 4" butterfly valve with Buna seals standard. This tank also has a standard vacuum pressure relief valve.

Features:

Store liquids with confidence with Rain for Rent's 21,000 gallon bi-level tank. Permanently attached axels for maximum maneuverability allow this 21,000 gallon tank to be moved with ease on the jobsite and a safety staircase ensures proper protection for workers on site. Epoxy coating offers chemical resistance and additional cleanliness for sensitive environmental applications.

Specs:

Manways	Four 22" hatches
Material	Steel, Coated
Capacity	21,000 gallons
Dry weight	26,000 lbs.
Footprint (LxWxH):	516" x 96" x 141"

Accessories:

- Spillguard
- Suction and discharge piping
- Vapor tight features
- Level gauges
- Steam coils

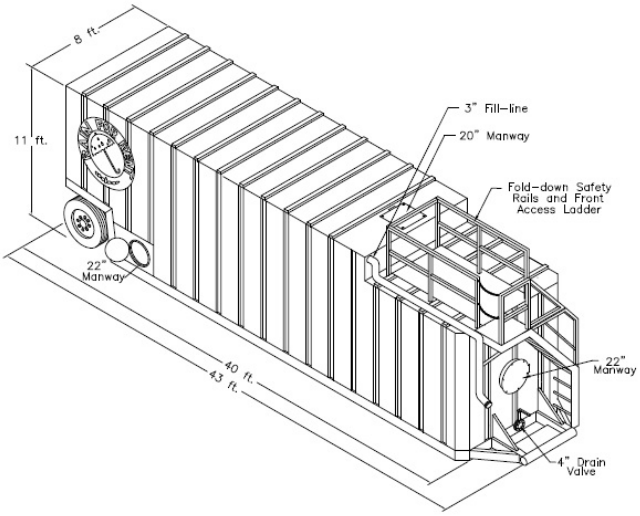

Liquid ingenuity.™

PUMPS • TANKS • FILTRATION • PIPE • SPILLGUARDS

800-742-7246
rainforrent.com

Rain for Rent is a registered trademark of Western Oilfields Supply Company. Features and specifications are subject to change without notice.