CTR
03-05-2020
10-I

STI
097190AFG200305R.pdf

TEST REPORT
INITIAL PERFORMANCE SPECIFICATION TEST
MEDLINE INDUSTRIES
EtO ABATEMENT SYSTEM COMMON STACK
CONTINUOUS EMISSION MONITORING SYSTEM
WAUKEGAN, ILLINOIS

Prepared For:

Medline Industries
3 Lake Drive
Northfield, IL 60093

Initial Review
Approved
By Kevin Mattison on 03/26/20

Prepared By:

Montrose Air Quality Services, LLC
951 Old Rand Road, Unit 106
Wauconda, IL 60084

Document No.: **M928ET-663754-RT-414**
Test Date: **March 5, 2020**
Submittal Date: **March 24, 2020**

STAC
ACCREDITED
TO ASTM D7036 ONLY
CERT #3925.01

MONTROSE
AIR QUALITY SERVICES

TABLE OF CONTENTS

SECTION **PAGE**

REVIEW AND CERTIFICATION 4
1.0 SUMMARY OF TEST PROGRAM AND RESULTS 5
1.1 TEST PROGRAM OBJECTIVES 5
1.2 TEST PROGRAM PARTICIPANTS 5
1.3 QUALITY STATEMENT 6
1.4 SUMMARY OF TEST RESULTS 6
2.0 SOURCE DESCRIPTION 7
2.1 FACILITY AND SOURCE DESCRIPTION 7
2.1.1 Overview 7
2.1.2 Process Description 7
2.1.3 Control Equipment 7
2.2 CEMS DESCRIPTION 8
2.2.1 Ethylene Oxide CEMS Description 8
2.2.2 Volumetric Flow CEMS Description 10
2.3 SAMPLING LOCATIONS 10
2.4 OPERATING CONDITIONS AND PROCESS DATA 10
3.0 TEST METHOD DETAILS 11
3.1 LIST OF TEST METHODS 11
3.1.1 Sampling Locations (USEPA Method 1) 11
3.1.2 Velocity and Volumetric Flow Rate (USEPA Method 2) 11
3.1.3 Molecular Weight (USEPA Method 3A) 11
3.1.4 Moisture Content 13
3.1.5 Gas Dilution System Verification (USEPA Method 205) 13
3.1.6 Ethylene Oxide and Moisture Determination (USEPA Method 320 and ASTM D6348-12) 13
3.2 MODIFICATIONS TO THE METHODS 14
3.3 RELATIVE ACCURACY CALCULATIONS 15
4.0 TEST RESULTS 18
APPENDIX A CALCULATION SUMMARIES 22
APPENDIX B FIELD DATA 59
APPENDIX C REFERENCE METHOD MONITORING DATA 68
APPENDIX D FTIR DATA 111
APPENDIX E MEDLINE CEMS, PROCESS, AND CD TEST DATA 155
APPENDIX F CALIBRATION DATA 209
APPENDIX G TEST PROGRAM QUALIFICATIONS 230

SECTION **PAGE**

LIST OF TABLES

TABLE 1-1 SUMMARY OF TEST PROGRAM 5

TABLE 1-2 SUMMARY OF CEMS RA TEST RESULTS 6

TABLE 2-1 CEMS INFORMATION 10

TABLE 4-1 EtO ABATEMENT SYSTEM COMMON STACK EtO RA TEST RESULTS (ppmv wb) 19

TABLE 4-2 EtO ABATEMENT SYSTEM COMMON STACK EtO RA TEST RESULTS (lb/hr)...20

TABLE 4-3 EtO ABATEMENT SYSTEM COMMON STACK VOLUMETRIC FLOW RA TEST RESULTS 21

LIST OF FIGURES

FIGURE 2-1 SIMPLIFIED BLOCK DIGRAM 8

FIGURE 2-2 ETHYLENE OXIDE CEMS SCHEMATIC..... 9

FIGURE 3-1 REFERENCE METHOD O_2 AND CO_2 SAMPLING SYSTEM 12

FIGURE 3-2 FTIR SAMPLING SYSTEM.....16

REVIEW AND CERTIFICATION

All work, calculations, and other activities and tasks performed and presented in this document were carried out by me or under my direction and supervision. I hereby certify that, to the best of my knowledge, Montrose operated in conformance with the requirements of the Montrose Quality Management System and ASTM D7036-04 during this test project.

Signature: William Craig James Date: 03/23/2020

Name: William Craig James, QSTI Title: Vice President, Technical

I have reviewed, technically and editorially, details, calculations, results, conclusions, and other appropriate written materials contained herein. I hereby certify that, to the best of my knowledge, the presented material is authentic, accurate, and conforms to the requirements of the Montrose Quality Management System and ASTM D7036-04.

Signature: Henry M. Taylor Date: 03/23/2020

Name: Henry M. Taylor, QSTO Title: Senior Quality Assurance Specialist

1.0 SUMMARY OF TEST PROGRAM AND RESULTS

1.1 TEST PROGRAM OBJECTIVES

Montrose Air Quality Services, LLC (Montrose) was contracted by Medline Industries (Medline) to perform an initial performance specification (PS) relative accuracy (RA) test at their facility located in Waukegan, Illinois.

The purpose of the test was to determine the relative accuracy (RA) of the ethylene oxide (EtO) Fourier transform infrared (FTIR) continuous emission monitoring system (CEMS) and volumetric flow monitoring system serving the EtO Abatement System.

Testing was conducted in accordance with the sampling and analytical procedures presented in Test Plan No. 928ET-663754-PP-11R3 dated January 23, 2020. A summary of the test program is presented in Table 1-1.

TABLE 1-1
SUMMARY OF TEST PROGRAM

Date	Source	Activity/ Parameters	Test Methods	No. of Runs	Run Duration
3/5/20	EtO Abatement System Common Stack	RA Test/ EtO, Volumetric Flow	1, 2, 3A, 205, 320, PS-6, PS-15	9	30 Minutes

Medline personnel performed the 24-hour 7-day calibration drift (CD) test and supplied the results to Montrose for inclusion in this report.

1.2 TEST PROGRAM PARTICIPANTS

A list of project participants is included below:

Facility Information

Source Location:	Medline Industries 1160 South Northpoint Boulevard Waukegan, IL 60085	
Project Contact:	Mr. Jasper Titus	Mr. Joe Montemurro
Role:	Director EHS	Associate Director - Sterilization
Telephone:	847-837-2784	224-572-6440
Email:	jtitus@medline.com	jmontemurro@medline.com

Testing Company Information

Testing Firm:	Montrose Air Quality Services, LLC
Contact:	Mr. William Craig James
Title:	Vice President, Technical
Telephone:	847-487-1580 Ext. 12419
Email:	wjames@montrose-env.com

Mr. Jasper Titus and Mr. Joe Montemurro of Medline coordinated the test and monitored process operations during testing. Mr. Craig James, Mr. Don Chapman, Mr. Jeremy Clark, and Mr. Vannak Khy of Montrose performed the test. Mr. Craig James was the onsite field test supervisor and qualified source testing individual for the test. Mr. Kevin Mattison of the Illinois Environmental Protection Agency witnessed the test.

1.3 QUALITY STATEMENT

Montrose is qualified to conduct this test program and has established a quality management system that led to accreditation with ASTM Standard D7036-04 (Standard Practice for Competence of Air Emission Testing Bodies). Montrose participates in annual functional assessments for conformance with D7036-04 which are conducted by the American Association for Laboratory Accreditation (A2LA). All testing performed by Montrose is supervised on site by at least one Qualified Individual (QI) as defined in D7036-04 Section 8.3.2. Data quality objectives for estimating measurement uncertainty within the documented limits in the test methods are met by using approved test protocols for each project as defined in D7036-04 Sections 7.2.1 and 12.10. Additional quality assurance information is presented in the report appendices.

1.4 SUMMARY OF TEST RESULTS

The test results are detailed in Section 4.0 of this document. The results were calculated using nine test runs. The analyzers performed within their applicable performance specification as summarized in Table 1-2.

TABLE 1-2
SUMMARY OF CEMS RA TEST RESULTS

Parameter	RA	Performance Specification Allowable
EtO, ppmv wb	1.48%	≤ 10%, Based on the Applicable Standard (0.200 ppmv wb)
EtO, lb/hr	4.69%	≤ 10%, Based on the Applicable Standard (0.0205 lb/hr)
Volumetric Flow, scfm	1.98%	≤ 20%, Based on the Mean Reference Method (RM) Value

2.0 SOURCE DESCRIPTION

2.1 FACILITY AND SOURCE DESCRIPTION

2.1.1 Overview

Medline operates a ten-chamber sterilization facility in Waukegan, Illinois. Products to be sterilized are placed in a sterilization chamber and are exposed to EtO, a sterilant gas, at a predetermined temperature, humidity level, and pressure. The EtO penetrates product packaging (e.g., cardboard shipping box, plastic shrink wrap, paper box, and product wrapping) and destroys bacteria and viruses on the product. The product remains sterile until use because bacteria and viruses cannot penetrate the product wrapping. Medline operates three 26-pallet chambers, four 13-pallet chambers, two 6-pallet chambers and one 3-pallet chamber.

2.1.2 Process Description

The typical sterilization cycle consists of six phases: (1) pre-sterilization conditioning, (2) sterilization, (3) evacuation, (4) nitrogen wash, (5) chamber exhaust, and (6) aeration. Each of these phases is discussed briefly below:

After the products have been loaded into the chamber and the airtight door is sealed, a partial vacuum is drawn inside the chamber. This initial vacuum, or drawdown, prevents dilution of the EtO. The chamber temperature and relative humidity is adjusted to ensure proper sterilization and the EtO is introduced into the chamber to achieve the desired concentration of EtO.

Following sufficient exposure time, the EtO is evacuated from the chamber with a vacuum pump. This post-cycle vacuum phase typically lasts about 25 minutes. The pressure in the chamber is then increased by introducing nitrogen. The combination of evacuation and nitrogen wash phases is repeated multiple times to remove as much of the EtO from the product as possible. The purpose of the nitrogen washes is to allow residual EtO to diffuse from the product.

At the end of the sterilization cycle the chamber is returned to atmospheric pressure by introducing air. When the chamber door is opened to unload product, the rear chamber vent system is activated to prevent the sterilization operators from being exposed to elevated levels of EtO that may be present inside the chamber

Following their removal from the sterilization chamber, the sterile products are placed in an aeration room and kept there for several hours or days depending on the product. The purpose of aeration is to allow further diffusion of residual EtO from the products prior to shipping in order to comply with the FDA and EPA guidelines for residual EtO.

2.1.3 Control Equipment

A simplified block process flow diagram showing the four inlet sampling locations and the stack sampling location is shown in Figure 2-1.

FIGURE 2-1
SIMPLIFIED BLOCK DIGRAM

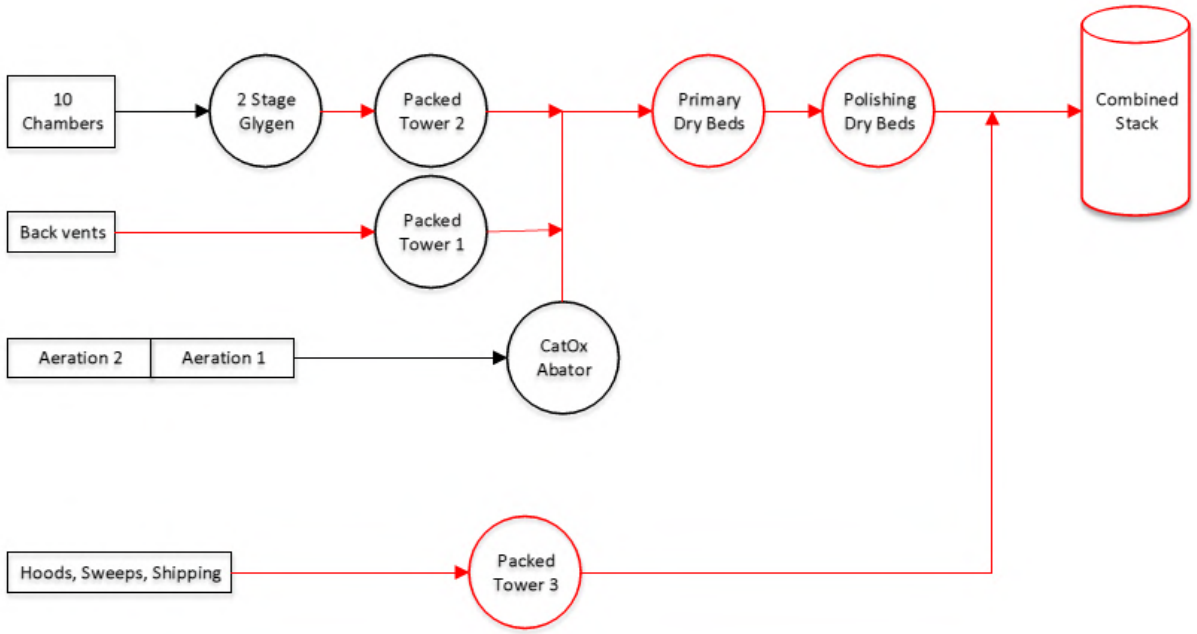

The 10 sterilization chambers (Inlet 1) are ducted to two stage Glygen™ scrubbers in series (primary controls) followed by Packed Tower #2 (secondary control) for removal of EtO. The gas stream then enters the primary and polishing dry beds for secondary removal and polishing before exiting to atmosphere in the common stack.

The backvents (Inlet 2) are ducted to Packed Tower #1 for primary removal of EtO. The gas stream then enters the primary and polishing dry beds and exits to the common stack.

The aeration rooms (Inlet 3) are ducted to the CatOx Abator (catalytic oxidizer) for primary removal of EtO. The gas stream then enters the primary and polishing dry beds before exiting to atmosphere in the common stack.

The hoods, sweeps and shipping area vents (Inlet 4) are ducted to Packed Tower #3 for removal of EtO. This gas stream vents to the common stack.

2.2 CEMS DESCRIPTION

2.2.1 Ethylene Oxide CEMS Description

The EtO monitoring system is a Model EMS-10TM/eo/cart manufactured by MAX Analytical. The EMS-10TM/eo/cart is a fully automated emission monitoring system capable of accurately analyzing gas streams for EtO. The primary analyzer utilizes FTIR Spectroscopy enhanced with StarBoost™ technology. The integrated design incorporates complete control of all gases including the sample stream, zero gas and calibration gas. This system is designed for gas streams that must be analyzed for EtO at low ppb levels. The EMS-10™/EO/cart can handle hot and wet samples using a single sampling pump and particulate filter.

The Starboost™ was also equipped with a MAX Thermal Oxidizer Module (TOM) to aid in collecting zeroed background interference data to enhance accurate measurements at low-level concentrations of volatile organic compounds. Max Analytical Technologies developed a TOM for zeroing of EtO CEMS with sample gas. The catalyst within the TOM is set to 125 °C to fully oxidize EtO without reducing the concentrations of water and methane in the sample. This allows an Interference Spectrum to be collected that matches the sample spectrum exceedingly well. When this Interference Spectrum is added to the regression matrix, zero drift and bias in the EtO measurement due to spectral interferences are minimized.

The TOM contains two oxidation catalyst cores in series to ensure complete removal of EtO from the sample. Stack gas is either run through the catalysts in Oxidation Mode to collect an Interference Spectrum, or stack gas is run in Bypass Mode to measure EtO.

The features of the EMS-10™/EO/ are presented in Figure 2-2.

FIGURE 2-2
ETHYLENE OXIDE CEMS SCHEMATIC

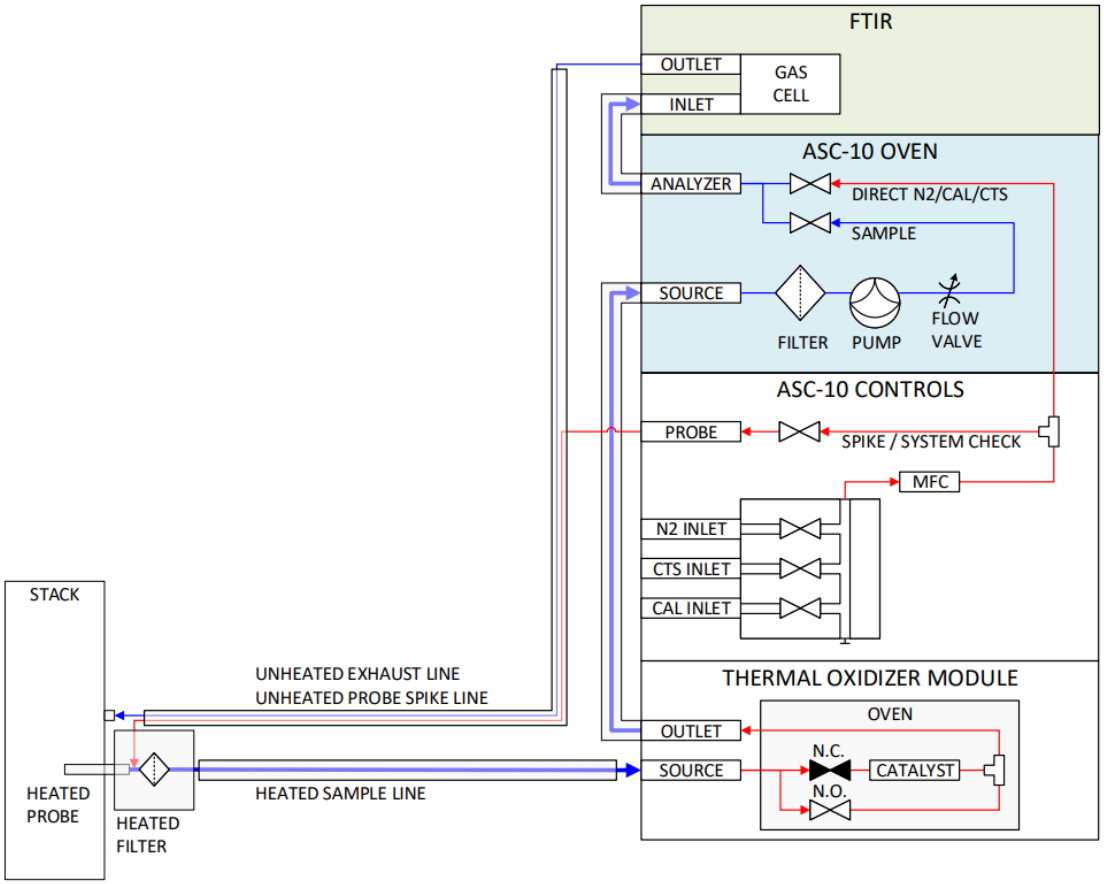

2.2.2 Volumetric Flow CEMS Description

The volumetric flow monitoring system, manufactured by EMRC, is acceptable to EPA as a flow monitoring device typically used on electrical generating utility stacks. It consists of an S-type pitot tube and is installed on a 4" diameter ANSI approved port with sealed flange. The device is a pressure differential device as typically used in the source testing industry.

The EMRC Gas Flow Monitor is designed to measure the dynamic pressure of gas flow in a stack. The system was initially developed for the sole purpose of measuring gas flow in a sulfur plant stack or gas stream. It is designed to tolerate high temperatures (~1,500 to 2,000°F), a corrosive environment, and a nominal particulate loading. In addition, the techniques employed meet regulatory (EPA and State) measurement criteria.

The CEMS information is provided in Table 2-1.

TABLE 2-1
CEMS INFORMATION

Analyzer Type	Manufacturer	Model	Serial Number
Ethylene Oxide	MKS-MAX Analytical	EMS-10™	110383419
Volumetric Flow Rate	EMRC, Inc.	EMRC S-type Pitot Flow Monitor	644

2.3 SAMPLING LOCATIONS

The sampling location and number of velocity traverse points were as follows:

Sampling Location	Stack Diameter (inches)	Port Location Upstream from Disturbance (inches)	Port Location Downstream from Disturbance (inches)	No. of Ports	Velocity Traverse Points per Port	Total Points
Common Stack	60	120	498	2	8	16

2.4 OPERATING CONDITIONS AND PROCESS DATA

Plant personnel established the test conditions and collected all applicable unit-operating data.

The RA test runs were performed over an approximate 8-hour period where multiple chambers were evacuated of EtO. A total of 508.2 lbs of EtO were used in the chambers evacuated in this testing window. At the beginning of the first RA test run, aeration was at 88.1% full based on pallet capacity and ended at 89.6% at the end of the last run.

3.0 TEST METHOD DETAILS

3.1 LIST OF TEST METHODS

Testing was conducted pursuant to the following procedures:

- Code of Federal Regulations, Title 40, Part 60 (40 CFR 60), Appendix A, USEPA Methods 1, 2, and 3A
- 40 CFR 60, Appendix B, PS-6 and PS-15
- 40 CFR 51, Appendix M, USEPA Method 205
- 40 CFR 63, Appendix A, USEPA Method 320
- ASTM D6348-12 – Standard Test Method for Determination of Gaseous Compounds by Extractive Direct Interface FTIR Spectroscopy
- Quality Assurance Handbook for Air Pollution Measurement Systems, Volume III, Stationary Source Specific Methods

3.1.1 Sampling Locations (USEPA Method 1)

The sampling point locations that were used for the determination of gas velocity and volumetric flow rate were determined following the procedural requirements of USEPA Method 1. The sampling location and number of velocity traverse points are provided in Subsection 2.3.

3.1.2 Velocity and Volumetric Flow Rate (USEPA Method 2)

Gas velocity and volumetric flow rate were determined in accordance with USEPA Method 2 procedures. Velocity measurements were performed using a Type-S pitot tube and Dwyer inclined oil gauge manometer. Temperature measurements were conducted using a digital temperature meter and chromel-alumel thermocouple.

3.1.3 Molecular Weight (USEPA Method 3A)

The stack gas oxygen (O_2) and carbon dioxide (CO_2) concentrations were determined in accordance with USEPA Method 3A using a Servomex, Inc. Model 1440 combination paramagnetic O_2 and non-dispersive infrared CO_2 analyzer.

As shown in Figure 3-1, the sampling system consisted of a heated probe with an in-stack filter followed by a calibration tee assembly. The probe system was connected to a heated Teflon sampling line that transported the gas sample through an ice-cooled condenser and an electronic chiller to remove moisture. The dry sample gas was then transported to a manifold system by a Teflon-lined sample pump and Teflon sample line. The manifold was connected with sample gas intake lines for the analyzers.

The sampling system was calibrated with applicable zero, mid-range, and high-range gases as specified in USEPA Method 3A. The calibration gases were generated from Protocol 1 calibration gases using an Environics Model 4040 Gas Dilution System. The dilution system was verified on site in accordance with USEPA Method 205.

FIGURE 3-1
REFERENCE METHOD O_2 AND CO_2 SAMPLING SYSTEM

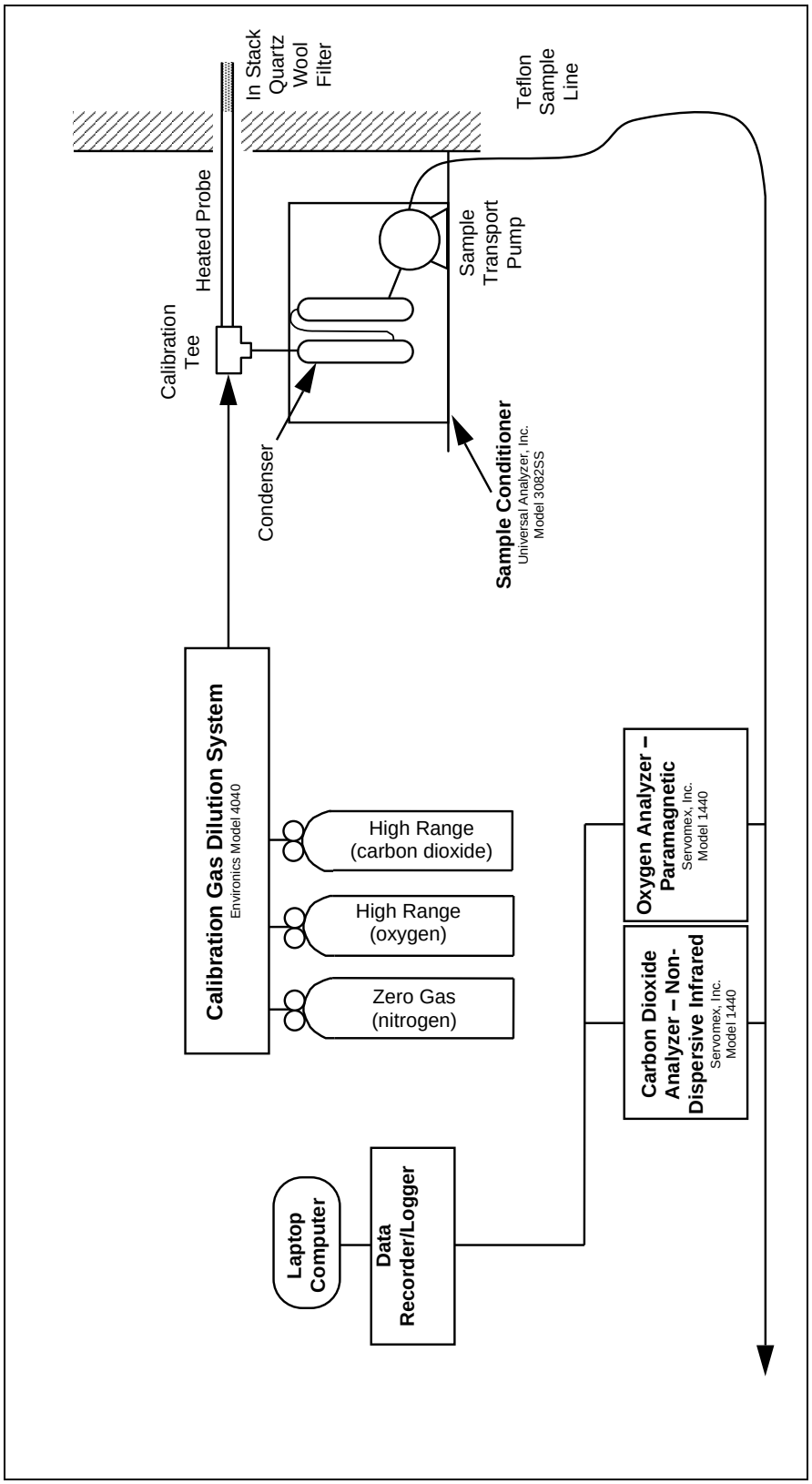

Response time, calibration error, and measurement system bias tests were performed prior to testing, and a pre/post calibration drift test was performed on each analyzer. The average zero and calibration drift values were used to correct each analyzer's raw data for instrument zero and drift for each respective test run.

The analyzer data were collected at 15-second intervals, and 1-minute averages were calculated by a data acquisition system consisting of an Omega OMB-DAQ-56 datalogger connected to a computer for digital data storage and reduction.

3.1.4 Moisture Content

Following the accepted alternate procedure in USEPA Method 4, Section 16.3, the moisture content was determined using FTIR measurements in accordance with USEPA Method 320 and ASTM D6348-12.

3.1.5 Gas Dilution System Verification (USEPA Method 205)

All analyzer diluted calibration standards were prepared using an Environics Model 4040 Gas Dilution System that was verified by a field evaluation at the job site following the procedures in USEPA Method 205.

The Environics Model 4040 employs four mass flow controllers (MFC). MFC No. 1 is normally designated for the nitrogen diluent. To verify the accuracy of MFC Nos. 1 and 2, the Servomex, Inc. Model 1440 O_2 analyzer was used. To verify the accuracy of MFC Nos. 1 and 3, the Servomex, Inc. Model 1440 CO_2 analyzer was used. To verify the accuracy of MFC Nos. 1 and 4, a Thermo Environmental Instruments, Inc. Model 48H gas filter correlation carbon monoxide (CO) analyzer was used.

The analyzers were pre-calibrated following the applicable methods. Following calibration, two diluted standards and an EPA Protocol 1 standard were alternately introduced in triplicate, and an average instrument response was calculated for each standard. No single response differed by more than ± 2% from the average response for each standard. The difference between the instrument average and the predicted concentration was less than ± 2% for each diluted standard. The difference between the certified gas concentration and the average instrument response for the EPA Protocol 1 standard was less than ± 2%.

3.1.6 Ethylene Oxide and Moisture Determination (USEPA Method 320 and ASTM D6348-12)

Ethylene oxide and moisture sampling was conducted using a MAX Analytical FTIR system enhanced with StarBoost™ technology. StarBoost™ is a MAX Analytical add-on to an existing MKS Model 2030 FTIR analyzer. It combines infrared filtering, signal amplification, and advanced software algorithms to greatly increase the signal intensity, resulting in much lower detection limits. The StarBoost™ meets USEPA Method 320 and ASTM D6348 criteria. As part of the filtering, StarBoost™ systems measure fewer gases simultaneously than standard FTIR analyzers. The useable IR region is determined by the targeted analytes and selected filter.

The Starboost™ was also equipped with a TOM module to aid in collecting zeroed background interference data to enhance accurate measurements at low-level concentrations of volatile organic compounds.

As shown in Figure 3-2, the sample delivery system consisted of a heated stainless-steel sampling probe, calibration tee, heated Teflon sampling line, fast loop bypass pump, and sample manifold. The sample gas was withdrawn from the test location at a constant rate. The probe and sample line were operated at approximately 370 °F to prevent the condensation of moisture and EtO. The wet gas was directed to the FTIR spectrometer gas cell. Results from the analyzer are determined on a "wet" volume basis.

A calibration transfer standard (CTS) was introduced into the system and two spectra were recorded at least 2 minutes apart. As long as the second spectrum was no greater than the first and within the uncertainty of the gas standard, it was used as the CTS spectrum.

After the required pre-test procedures were performed, stack gas was sampled continuously. Sample interferograms, processed absorbance spectra, background interferograms, CTS sample interferograms, and CTS absorbance spectra were recorded. Sample conditions, instrument settings, and test records were also recorded throughout the test. A new CTS spectrum was obtained after each sampling run. The post-test CTS spectrum was compared to the pre-test spectrum. The peak absorbance from each spectrum must be within 5% of the mean value.

A system recovery check using the analyte spiking technique was performed prior to testing. First, some of the effluent gas was sampled to determine native concentration of target analytes. The analyte spike calibration gas was introduced to the FTIR gas cell, and the results were determined using the analytical algorithm. Results from the calibration gas were recorded and compared to the certified value of the calibration gas. For reactive condensable gases, the results must be within 10% or 5 ppm.

The analyte spike calibration gas was then directed through the entire sampling system and allowed to mix with effluent gas sample (or ambient air at the inlets) at a known flow rate. The flow ratio of calibration gas to ambient air or source effluent must be no greater than a ratio of 1:10 (one-part calibration gas to ten-parts total flow) for the determination of sample recovery. The dilution factor of the analyte spike concentration gas was calculated, and the bias between the observed spike value and the expected response was determined. The percent recovery of the spiked analytes was calculated. Spike recovery results must meet the data quality objectives of the test program. The average spiked concentration must be within 70% - 130% of the expected concentration.

3.2 MODIFICATIONS TO THE METHODS

EtO cylinders were only available in ± 5% certifications without an alternative (Alt) testing procedure ALT-114 and ALT-118; "Alternative Approaches to NIST-Traceable Reference Gases".

https://cfpub.epa.gov/si/si_public_record_report.cfm?Lab=NRMRL&dirEntryId=336073

Ryan, J. ALT-114 and ALT-118 Alternative Approaches to NIST-Traceable Reference Gases. Presented at "The 41st Stationary Source Sampling and Analysis for Air Pollutants Conference, Tucson, AZ, April 9 - 14, 2017."

Montrose could not find a calibration gas manufacturer that would blend an EtO cylinder in the ppm range at the required EPA protocol gas accuracy certification of ± 2%. The best the current available gas vendors could certify their EtO gas cylinders was ± 5%. Montrose also could not find a vendor who would perform Alt 114 procedures for certification of the EtO gas concentrations. Therefore, it was requested that the EtO cylinders accuracy of ± 5% be accepted

in lieu of the protocol requirement of ± 2%. It should be noted that calibration cylinders of many organic compounds are not commercially available at ± 2% accuracy due to stability, vapor pressure, or reactivity issues of the specific compound.

Additionally, because of Montrose's experience with EtO and discussions with EPA Office of Air Quality Planning and Standards (OAQPS) who also indicated instability of EtO in cylinders below 2 ppmv, a 50 ppmv cylinder was used to determine calibration stability as per PS-15, Sections 10 and 11. Another 2 ppmv cylinder of EtO with a tracer gas of 500 ppm ethane was used to determine the dynamic spike dilution factor (Method 320) and was transported directly to the FTIR sample cell initially to provide an accurate cylinder tag value for the cylinder used for the dynamic spiking.

The CTS used for the path length and associated quality control measurements in Method 320 was 50 to 500 ppm methane. This was not a modification to the method, but is placed in this section to point out the difference between CTS and the tracer gas used.

Because of the variable EtO concentration, dynamic spiking as required by Method 320 was conducted into ambient air and not into the sample stream. Because the sample streams are essentially ambient air, the sample streams have similar potential interferences.

3.3 RELATIVE ACCURACY CALCULATIONS

The RA was determined using the following equations:

a) Arithmetic mean; calculated arithmetic mean of the difference between the RM results and the CEMS data:

$$\bar{d} = \frac{1}{n}\sum_{i=1}^{n} d_i$$

Where:

n = Number of data points

$\sum_{i=1}^{n} d_i$ = Algebraic sum of the individual differences d_i

b) Standard deviation:

$$S_d = \left[\frac{\sum_{i=1}^{n} d_i^2 - \frac{\left(\sum_{i=1}^{n} d_i\right)^2}{n}}{n-1} \right]^{1/2}$$

FIGURE 3-2
FTIR SAMPLING SYSTEM

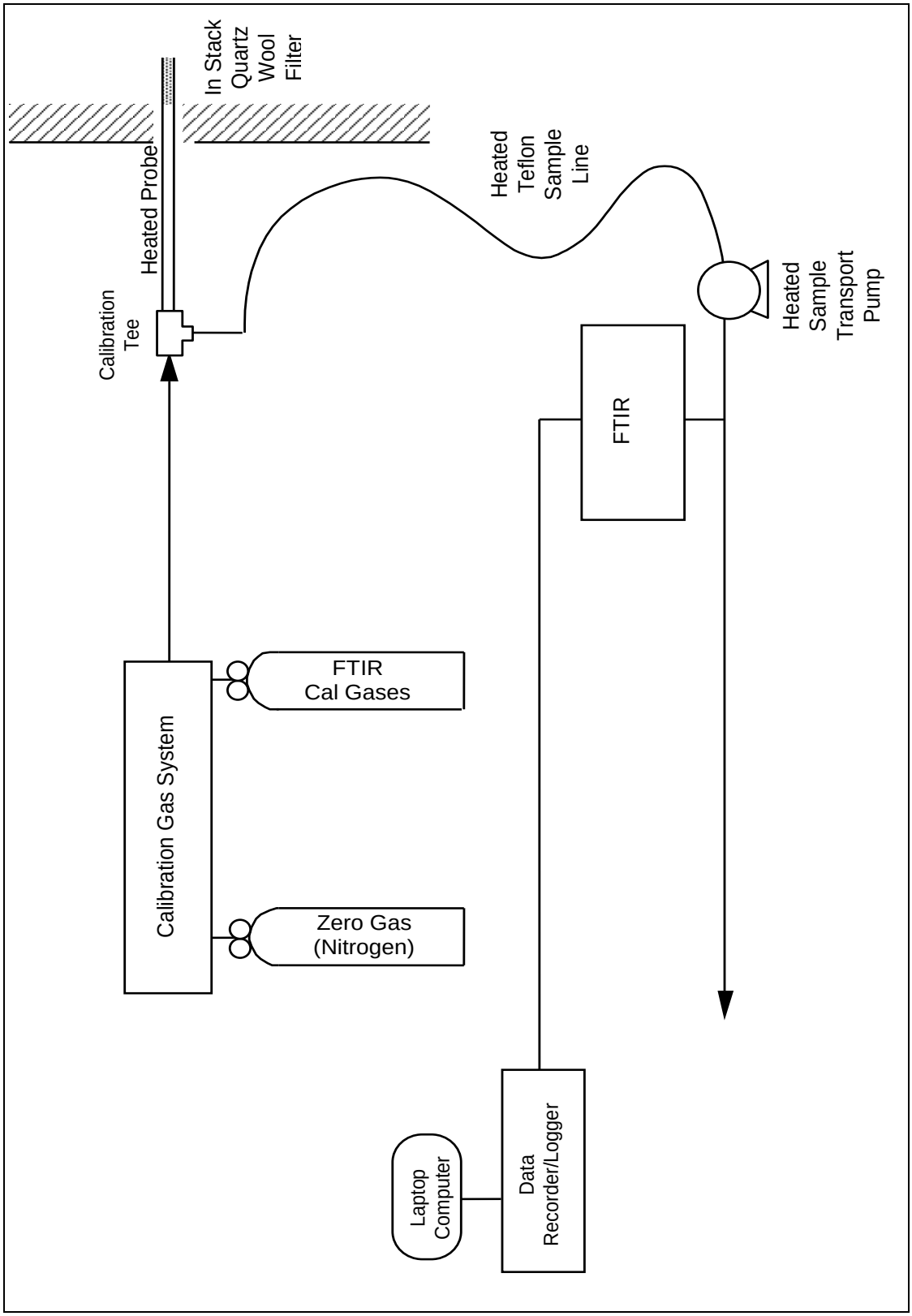

c) Confidence coefficient; 2.5% error confidence coefficient (one-tailed):

$$CC = t_{0.975} \frac{S_d}{\sqrt{n}}$$

Where:

$t_{0.975}$ = t-value as below = 2.306 for 9 runs

n[a]	$t_{0.975}$	n[a]	$t_{0.975}$	n[a]	$t_{0.975}$
2	12.706	7	2.447	12	2.201
3	4.303	8	2.365	13	2.179
4	3.182	9	2.306	14	2.160
5	2.776	10	2.262	15	2.145
6	2.571	11	2.228	16	2.131

[a]The values in this table are already corrected for n-1 degrees of freedom. Use n equal to the number of individual values.

d) Relative accuracy:

$$RA = \frac{|\bar{d}| + |CC|}{\overline{RM}} \times 100$$

Where:

$|\bar{d}|$ = Absolute value of the mean difference (from equation a)

$|CC|$ = Absolute value of the confidence coefficient (from equation c)

$\overline{RM}$ = Average RM value or applicable standard

4.0 TEST RESULTS

The RA test results are presented in Tables 4-1 through 4-3.

The calculation summaries, field data, reference method monitoring data, FTIR data, Medline CEMS, process, and CD test data, calibration data, and test program qualifications are included in the appendices.

TABLE 4-1
EtO ABATEMENT SYSTEM COMMON STACK EtO RA TEST RESULTS (ppmv wb)

Test Run No.	Date	Start Time	Stop Time	Reference Method Samples (RMi) EtO ppmv wb	CEMS Output (CEMi) EtO ppmv wb	(RMi – CEMi) Difference (d)
1	3/5/2020	09:23	09:53	0.0347	0.0386	-0.0039
2	3/5/2020	10:18	10:48	0.0202	0.0200	0.0002
3	3/5/2020	11:30	12:00	0.0156	0.0100[a]	0.0056
4	3/5/2020	12:30	13:00	0.0062[b]	0.0100[a]	-0.0038
5	3/5/2020	13:25	13:55	0.0062[b]	0.0100[a]	-0.0038
6	3/5/2020	14:20	14:50	0.0118	0.0100[a]	0.0018
7	3/5/2020	15:12	15:42	0.0123	0.0137	-0.0014
8	3/5/2020	16:09	16:39	0.0090	0.0100[a]	-0.0010
9	3/5/2020	17:08	17:38	0.0134	0.0100[a]	0.0034

Applicable Standard:	0.200	ppmv wb
Mean Reference Method Value:	0.0144	ppmv wb
Mean CEMS Value:	0.0147	ppmv wb
Average d:	-0.0003	ppmv wb
n:	9	
$t_{0.975}$:	2.306	
Standard Deviation:	0.0034	
Confidence Coefficient (One-Tailed):	0.0026	
Relative Accuracy:	**1.48%**	**Based on the Applicable Standard**
Allowable:	≤ 10%	Based on the Applicable Standard

[a]CEMS concentration at system limit of detection (LOD) of 10.0 ppbv wb
[b]RM concentration at method LOD of 6.2 ppbv wb

TABLE 4-2
EtO ABATEMENT SYSTEM COMMON STACK EtO RA TEST RESULTS (lb/hr)

Test Run No.	Date	Start Time	Stop Time	Reference Method Samples (RMi) EtO lb/hr	CEMS Output (CEMi) EtO lb/hr	(RMi – CEMi) Difference (d)
1	3/5/2020	09:23	09:53	0.0126	0.0137	-0.0011
2	3/5/2020	10:18	10:48	0.0073	0.0071	0.0002
3	3/5/2020	11:30	12:00	0.0056	0.0036[a]	0.0020
4	3/5/2020	12:30	13:00	0.0022[b]	0.0036[a]	-0.0013
5	3/5/2020	13:25	13:55	0.0022[b]	0.0036[a]	-0.0014
6	3/5/2020	14:20	14:50	0.0043	0.0035[a]	0.0007
7	3/5/2020	15:12	15:42	0.0044	0.0048	-0.0005
8	3/5/2020	16:09	16:39	0.0032	0.0035[a]	-0.0004
9	3/5/2020	17:08	17:38	0.0048	0.0036[a]	0.0013

Applicable Standard:	0.0205	lb/hr
Mean Reference Method Value:	0.0052	lb/hr
Mean CEMS Value:	0.0052	lb/hr
Average d:	-0.0001	lb/hr
n:	9	
$t_{0.975}$:	2.306	
Standard Deviation:	0.0012	
Confidence Coefficient (One-Tailed):	0.0009	
Relative Accuracy:	**4.69%**	**Based on the Applicable Standard**
Allowable:	≤ 10%	Based on the Applicable Standard

[a]CEMS concentration at system LOD of 10.0 ppbv wb
[b]RM concentration at method LOD of 6.2 ppbv wb

TABLE 4-3
EtO ABATEMENT SYSTEM COMMON STACK VOLUMETRIC FLOW RA TEST RESULTS

Test Run No.	Date	Start Time	Stop Time	Reference Method Samples (RMi) Volumetric Flow scfm	CEMS Output (CEMi) Volumetric Flo scfm	(RMi – CEMi) Difference (d)
1	3/5/2020	09:23	09:53	53,129	51,676	1,453
2	3/5/2020	10:18	10:48	52,582	51,515	1,067
3	3/5/2020	11:30	12:00	51,957	52,279	-322
4	3/5/2020	12:30	13:00	52,808	51,985	823
5	3/5/2020	13:25	13:55	51,295	51,900	-605
6	3/5/2020	14:20	14:50	52,766	51,653	1,113
7	3/5/2020	15:12	15:42	51,744	51,293	451
8	3/5/2020	16:09	16:39	51,136	51,742	-606
9	3/5/2020	17:08	17:38	52,403	51,856	547

Mean Reference Method Value:	52,202	scfm
Mean CEMS Value:	51,767	scfm
Average d:	435.7	scfm
n:	9	
$t_{0.975}$:	2.306	
Standard Deviation:	774.44	
Confidence Coefficient (One-Tailed):	595.29	
Relative Accuracy:	**1.98%**	**Based on the Mean RM Value**
Allowable:	≤ 20%	Based on the Mean RM Value

APPENDIX A
CALCULATION SUMMARIES

USEPA Method 2
Volumetric Flow Rate Sample Calculations

Client:	Medline Industries
Location:	Waukegan, Illinois
Source:	ETO Abatement System Common Stack
Date:	3/5/2020
Run #:	1
Time:	0923-0953

Data Input

Carbon Dioxide (CO_2):	0.23	**%**
Oxygen (O_2):	20.64	**%**
Nitrogen (N_2):	79.14	**%**
Fractional Moisture Content (B_{wo})	0.012342	**(from Starboost)**
Stack Temperature (T_a):	72.7	**°F**
Pitot Coefficient (C_p):	0.84	**dimensionless**
Average square root of ΔP	0.8147	
Barometric Pressure (P_{bar}):	29.23	**inches Hg**
Static Pressure (S_t)	-0.44	**inches H_2O**
Stack diameter:	60.00	**inches**
Stack width:	n/a	**inches**
Stack length:	n/a	**inches**
Stack area (A_s):	19.6350	**ft^2**

Sample calculations @ standard conditions (29.92 inches Hg, 68.0 °F):

Dry molecular weight of stack gas:

$$M_d = (0.44 \times \%CO_2) + (0.32 \times \%O_2) + (0.28 \times \%N_2)$$ = **28.862 lb/lb-mole**

Molecular weight of stack gas, wet basis:

$$M_s = (M_d \times (1 - B_{ws})) + (18 \times B_{ws})$$ = **28.728 lb/lb-mole**

Absolute stack gas pressure:

$$P_s = P_{bar} + \left(\frac{S_t}{13.6}\right)$$ = **29.199 inches Hg**

Stack gas velocity:

$$V_s = 85.49 \times C_p \times \sqrt{\Delta P} \times \sqrt{\frac{(T_s + 460)}{(P_s \times M_s)}}$$ = **46.622 feet/second**

Stack gas volumetric flow rate:

$$Q_a = A_s \times V_s \times 60$$ = **54,925 acfm**

Stack gas volumatric flow rate, wet basis:

$$Q_{sw} = Q_a \times \left[\left(\frac{528°R}{29.92in.Hg}\right) \times \left(\frac{P_s}{T_s + 460}\right)\right]$$ = **53,129 scfm**

$$Q_{sw} = Q_a \times \left[\left(\frac{528°R}{29.92in.Hg}\right) \times \left(\frac{P_s}{T_s + 460}\right)\right] \times 60$$ = **3,187,749 scfh**

Stack gas volumetric flow rate, dry basis:

$$Q_{std} = Q_{sw} \times (1 - B_{wo})$$ = **52,473 dscfm**

$$Q_{std} = Q_{sw} \times (1 - B_{wo}) \times 60$$ = **3,148,407 dscfh**

USEPA Method 3-A
Stack Oxygen
Calibration Drift Correction And Emission Rate Calculation

Company: Medline Industries
Location: Waukegan, Illinois
Source: ETO Abatement System Common Stack
Test Date: 3/5/2020
Test Run #: 1
Test Time: 0923-0953

Data Input:

Average chart reading (C):	20.58 **% db**
Average pre/post-test zero calibration reading (C_o):	0.04 **% db**
Calibration gas concentration (C_{ma}):	21.0 **% db**
Average pre/post-test calibration gas reading (C_m):	20.94 **% db**

Sample calculations @ standard conditions (29.92 inches Hg, 68.0 °F):

Stack Oxygen
Corrected for zero and calibration drift:

$$C_{gas} = \left(\overline{C} - C_o\right)\frac{C_{ma}}{C_m - C_o}$$ = **20.637 % db**

USEPA Method 3-A
Stack CO2
Calibration Drift Correction And Emission Rate Calculation

Company: Medline Industries
Location: Waukegan, Illinois
Source: ETO Abatement System Common Stack
Test Date: 3/5/2020
Test Run #: 1
Test Time: 0923-0953

Data Input:

Average chart reading (C):	0.24 **% db**
Average pre/post-test zero calibration reading (C_o):	0.01 **% db**
Calibration gas concentration (C_{ma}):	2.5 **% db**
Average pre/post-test calibration gas reading (C_m):	2.51 **% db**

Sample calculations @ standard conditions (29.92 inches Hg, 68.0 °F):

Stack CO2
Corrected for zero and calibration drift:

$$C_{gas} = \left(\overline{C} - C_o\right)\frac{C_{ma}}{C_m - C_o}$$ = **0.226 % db**

USEPA Method 320
Ethylene Oxide
Emission Rate Calculation

Company: Medline Industries
Location: Waukegan, Illinois
Source: ETO Abatement System Common Stack
Test Date: 3/5/2020
Test Run #: 1
Test Time: 0923-0953

Data Input:

Average FTIR reading (C):	0.0347	**ppmv wb**
Stack gas volumetric flow rate (Q_{std}):	3,187,749	**scfh**
Compound molecular weight (MW):	44.05	**lb/lb-mole**

Sample calculations @ standard conditions (29.92 inches Hg, 68.0 °F):

Ethylene Oxide
Calculated FTIR Concentration:

= 0.0347 **ppmv wb**

Ethylene Oxide
Calculated FTIR Concentration:

$$C_{gas,lb/scf} = C_{gas} \times \left(\frac{MW\ lb/lb-mole}{385.26 \times 10^6\ ft^3\ /\ lb-mole} \right)$$

= 0.00397 **x 10-6 lb/scf**

$$C_{gas,mg/scm} = C_{gas,lb/dscf} \times 16.0319$$

= 0.0636 **mg/scm**

Ethylene Oxide
Emission rate:

$$E_{gas,lb/hr} = (C_{gas,lb/dscf}) \times (Q_{std})$$

= 0.01265 **lb/hr**

USEPA Method 2
Volumetric Flow Rate Sample Calculations

Client:	Medline Industries
Location:	Waukegan, Illinois
Source:	ETO Abatement System Common Stack
Date:	3/5/2020
Run #:	2
Time:	1018-1048

Data Input

Carbon Dioxide (CO_2):	0.22	**%**
Oxygen (O_2):	20.66	**%**
Nitrogen (N_2):	79.13	**%**
Fractional Moisture Content (B_{wo})	0.012471	**(from Starboost)**
Stack Temperature (T_s):	75.0	**°F**
Pitot Coefficient (C_p):	0.84	**dimensionless**
Average square root of ΔP	0.8080	
Barometric Pressure (P_{bar}):	29.23	**inches Hg**
Static Pressure (S_t)	-0.42	**inches H_2O**
Stack diameter:	60.00	**inches**
Stack width:	n/a	**inches**
Stack length:	n/a	**inches**
Stack area (A_s):	19.6350	**ft^2**

Sample calculations @ standard conditions (29.92 inches Hg, 68.0 °F):

Dry molecular weight of stack gas:

$$M_d = (0.44 \times \%CO_2) + (0.32 \times \%O_2) + (0.28 \times \%N_2)$$ = **28.861 lb/lb-mole**

Molecular weight of stack gas, wet basis:

$$M_s = (M_d \times (1 - B_{ws})) + (18 \times B_{ws})$$ = **28.726 lb/lb-mole**

Absolute stack gas pressure:

$$P_s = P_{bar} + \left(\frac{S_t}{13.6}\right)$$ = **29.200 inches Hg**

Stack gas velocity:

$$V_s = 85.49 \times C_p \times \sqrt{\Delta P} \times \sqrt{\frac{(T_s + 460)}{(P_s \times M_s)}}$$ = **46.340 feet/second**

Stack gas volumetric flow rate:

$$Q_a = A_s \times V_s \times 60$$ = **54,593 acfm**

Stack gas volumatric flow rate, wet basis:

$$Q_{sw} = Q_a \times \left[\left(\frac{528°R}{29.92in.Hg}\right) \times \left(\frac{P_s}{T_s + 460}\right)\right]$$ = **52,582 scfm**

$$Q_{sw} = Q_a \times \left[\left(\frac{528°R}{29.92in.Hg}\right) \times \left(\frac{P_s}{T_s + 460}\right)\right] \times 60$$ = **3,154,936 scfh**

Stack gas volumetric flow rate, dry basis:

$$Q_{std} = Q_{sw} \times (1 - B_{wo})$$ = **51,927 dscfm**

$$Q_{std} = Q_{sw} \times (1 - B_{wo}) \times 60$$ = **3,115,592 dscfh**

USEPA Method 3-A
Stack Oxygen
Calibration Drift Correction And Emission Rate Calculation

Company: Medline Industries
Location: Waukegan, Illinois
Source: ETO Abatement System Common Stack
Test Date: 3/5/2020
Test Run #: 2
Test Time: 1018-1048

Data Input:

Average chart reading (C):	20.54 **% db**
Average pre/post-test zero calibration reading (C_o):	0.02 **% db**
Calibration gas concentration (C_{ma}):	21.0 **% db**
Average pre/post-test calibration gas reading (C_m):	20.88 **% db**

Sample calculations @ standard conditions (29.92 inches Hg, 68.0 °F):

Stack Oxygen
Corrected for zero and calibration drift:

$$C_{gas} = \left(\overline{C} - C_O\right)\frac{C_{ma}}{C_m - C_O}$$ = **20.656 % db**

USEPA Method 3-A
Stack CO2
Calibration Drift Correction And Emission Rate Calculation

Company: Medline Industries
Location: Waukegan, Illinois
Source: ETO Abatement System Common Stack
Test Date: 3/5/2020
Test Run #: 2
Test Time: 1018-1048

Data Input:

Average chart reading (C):	0.22 **% db**
Average pre/post-test zero calibration reading (C_o):	0.00 **% db**
Calibration gas concentration (C_{ma}):	2.5 **% db**
Average pre/post-test calibration gas reading (C_m):	2.50 **% db**

Sample calculations @ standard conditions (29.92 inches Hg, 68.0 °F):

Stack CO2
Corrected for zero and calibration drift:

$$C_{gas} = \left(\overline{C} - C_O\right)\frac{C_{ma}}{C_m - C_O}$$ = **0.217 % db**

USEPA Method 320
Ethylene Oxide
Emission Rate Calculation

Company: Medline Industries
Location: Waukegan, Illinois
Source: ETO Abatement System Common Stack
Test Date: 3/5/2020
Test Run #: 2
Test Time: 1018-1048

Data Input:

Average FTIR reading (C):	0.0202	**ppmv wb**
Stack gas volumetric flow rate (Q_{std}):	3,154,936	**scfh**
Compound molecular weight (MW):	44.05	**lb/lb-mole**

Sample calculations @ standard conditions (29.92 inches Hg, 68.0 °F):

Ethylene Oxide
Calculated FTIR Concentration:

= 0.0202 **ppmv wb**

Ethylene Oxide
Calculated FTIR Concentration:

$$C_{gas,lb/scf} = C_{gas} \times \left(\frac{MW\ lb/lb-mole}{385.26 \times 10^6\ ft^3\ /\ lb-mole} \right)$$ = 0.00231 **x 10-6 lb/scf**

$$C_{gas,mg/scm} = C_{gas,lb/dscf} \times 16.0319$$ = 0.0371 **mg/scm**

Ethylene Oxide
Emission rate:

$$E_{gas,lb/hr} = \left(C_{gas,lb/dscf}\right) x \left(Q_{std}\right)$$ = 0.00730 **lb/hr**

USEPA Method 2
Volumetric Flow Rate Sample Calculations

Client:	Medline Industries
Location:	Waukegan, Illinois
Source:	ETO Abatement System Common Stack
Date:	3/5/2020
Run #:	3
Time:	1130-1200

Data Input

Carbon Dioxide (CO_2):	0.24	**%**
Oxygen (O_2):	20.66	**%**
Nitrogen (N_2):	79.10	**%**
Fractional Moisture Content (B_{wo})	0.001256	**(from Starboost)**
Stack Temperature (T_s):	74.9	**°F**
Pitot Coefficient (C_p):	0.84	**dimensionless**
Average square root of ΔP	0.8002	
Barometric Pressure (P_{bar}):	29.23	**inches Hg**
Static Pressure (S_t)	-0.54	**inches H_2O**
Stack diameter:	60.00	**inches**
Stack width:	n/a	**inches**
Stack length:	n/a	**inches**
Stack area (A_s):	19.6350	**ft^2**

Sample calculations @ standard conditions (29.92 inches Hg, 68.0 °F):

Dry molecular weight of stack gas:

$$M_d = (0.44 \times \%CO_2) + (0.32 \times \%O_2) + (0.28 \times \%N_2)$$ = **28.865 lb/lb-mole**

Molecular weight of stack gas, wet basis:

$$M_s = (M_d \times (1 - B_{ws})) + (18 \times B_{ws})$$ = **28.852 lb/lb-mole**

Absolute stack gas pressure:

$$P_s = P_{bar} + \left(\frac{S_t}{13.6}\right)$$ = **29.190 inches Hg**

Stack gas velocity:

$$V_s = 85.49 \times C_p \times \sqrt{\Delta P} \times \sqrt{\frac{(T_s + 460)}{(P_s \times M_s)}}$$ = **45.796 feet/second**

Stack gas volumetric flow rate:

$$Q_a = A_s \times V_s \times 60$$ = **53,952 acfm**

Stack gas volumetric flow rate, wet basis:

$$Q_{sw} = Q_a \times \left[\left(\frac{528°R}{29.92in.Hg}\right) \times \left(\frac{P_s}{T_s + 460}\right)\right]$$ = **51,957 scfm**

$$Q_{sw} = Q_a \times \left[\left(\frac{528°R}{29.92in.Hg}\right) \times \left(\frac{P_s}{T_s + 460}\right)\right] \times 60$$ = **3,117,412 scfh**

Stack gas volumetric flow rate, dry basis:

$$Q_{std} = Q_{sw} \times (1 - B_{wo})$$ = **51,892 dscfm**

$$Q_{std} = Q_{sw} \times (1 - B_{wo}) \times 60$$ = **3,113,498 dscfh**

USEPA Method 3-A
Stack Oxygen
Calibration Drift Correction And Emission Rate Calculation

Company: Medline Industries
Location: Waukegan, Illinois
Source: ETO Abatement System Common Stack
Test Date: 3/5/2020
Test Run #: 3
Test Time: 1130-1200

Data Input:

Average chart reading (C):	20.53 **% db**
Average pre/post-test zero calibration reading (C_o):	0.02 **% db**
Calibration gas concentration (C_{ma}):	21.0 **% db**
Average pre/post-test calibration gas reading (C_m):	20.87 **% db**

Sample calculations @ standard conditions (29.92 inches Hg, 68.0 °F):

Stack Oxygen
Corrected for zero and calibration drift:

$$C_{gas} = \left(\overline{C} - C_O\right)\frac{C_{ma}}{C_m - C_O}$$ = **20.658 % db**

USEPA Method 3-A
Stack CO2
Calibration Drift Correction And Emission Rate Calculation

Company: Medline Industries
Location: Waukegan, Illinois
Source: ETO Abatement System Common Stack
Test Date: 3/5/2020
Test Run #: 3
Test Time: 1130-1200

Data Input:

Average chart reading (C):	0.21 **% db**
Average pre/post-test zero calibration reading (C_o):	-0.03 **% db**
Calibration gas concentration (C_{ma}):	2.5 **% db**
Average pre/post-test calibration gas reading (C_m):	2.49 **% db**

Sample calculations @ standard conditions (29.92 inches Hg, 68.0 °F):

Stack CO2
Corrected for zero and calibration drift:

$$C_{gas} = \left(\overline{C} - C_O\right)\frac{C_{ma}}{C_m - C_O}$$ = **0.243 % db**

USEPA Method 320
Ethylene Oxide
Emission Rate Calculation

Company: Medline Industries
Location: Waukegan, Illinois
Source: ETO Abatement System Common Stack
Test Date: 3/5/2020
Test Run #: 3
Test Time: 1130-1200

Data Input:

Average FTIR reading (C):	0.0156	**ppmv wb**
Stack gas volumetric flow rate (Q_{std}):	3,117,412	**scfh**
Compound molecular weight (MW):	44.05	**lb/lb-mole**

Sample calculations @ standard conditions (29.92 inches Hg, 68.0 °F):

Ethylene Oxide
Calculated FTIR Concentration:

= 0.0156 **ppmv wb**

Ethylene Oxide
Calculated FTIR Concentration:

$$C_{gas,lb/scf} = C_{gas} \times \left(\frac{MW\ lb/lb-mole}{385.26 \times 10^6\ ft^3\ /\ lb-mole} \right)$$

= 0.00179 **x 10-6 lb/scf**

$$C_{gas,mg/scm} = C_{gas,lb/dscf} \times 16.0319$$

= 0.0287 **mg/scm**

Ethylene Oxide
Emission rate:

$$E_{gas,lb/hr} = (C_{gas,lb/dscf}) \times (Q_{std})$$

= 0.00557 **lb/hr**

USEPA Method 2
Volumetric Flow Rate Sample Calculations

Client:	Medline Industries
Location:	Waukegan, Illinois
Source:	ETO Abatement System Common Stack
Date:	3/5/2020
Run #:	4
Time:	1230-1300

Data Input

Carbon Dioxide (CO_2):	0.24	**%**
Oxygen (O_2):	20.56	**%**
Nitrogen (N_2):	79.20	**%**
Fractional Moisture Content (B_{wo})	0.001269	**(from Starboost)**
Stack Temperature (T_s):	74.9	**°F**
Pitot Coefficient (C_p):	0.84	**dimensionless**
Average square root of ΔP	0.8132	
Barometric Pressure (P_{bar}):	29.23	**inches Hg**
Static Pressure (S_t)	-0.51	**inches H_2O**
Stack diameter:	60.00	**inches**
Stack width:	n/a	**inches**
Stack length:	n/a	**inches**
Stack area (A_s):	19.6350	**ft^2**

Sample calculations @ standard conditions (29.92 inches Hg, 68.0 °F):

Dry molecular weight of stack gas:

$$M_d = (0.44 \times \%CO_2) + (0.32 \times \%O_2) + (0.28 \times \%N_2)$$ = **28.860 lb/lb-mole**

Molecular weight of stack gas, wet basis:

$$M_s = (M_d \times (1 - B_{ws})) + (18 \times B_{ws})$$ = **28.846 lb/lb-mole**

Absolute stack gas pressure:

$$P_s = P_{bar} + \left(\frac{S_t}{13.6}\right)$$ = **29.193 inches Hg**

Stack gas velocity:

$$V_s = 85.49 \times C_p \times \sqrt{\Delta P} \times \sqrt{\frac{(T_s + 460)}{(P_s \times M_s)}}$$ = **46.542 feet/second**

Stack gas volumetric flow rate:

$$Q_a = A_s \times V_s \times 60$$ = **54,831 acfm**

Stack gas volumetric flow rate, wet basis:

$$Q_{sw} = Q_a \times \left[\left(\frac{528°R}{29.92in.Hg}\right) \times \left(\frac{P_s}{T_s + 460}\right)\right]$$ = **52,808 scfm**

$$Q_{sw} = Q_a \times \left[\left(\frac{528°R}{29.92in.Hg}\right) \times \left(\frac{P_s}{T_s + 460}\right)\right] \times 60$$ = **3,168,463 scfh**

Stack gas volumetric flow rate, dry basis:

$$Q_{std} = Q_{sw} \times (1 - B_{wo})$$ = **52,741 dscfm**

$$Q_{std} = Q_{sw} \times (1 - B_{wo}) \times 60$$ = **3,164,442 dscfh**

USEPA Method 3-A
Stack Oxygen
Calibration Drift Correction And Emission Rate Calculation

Company: Medline Industries
Location: Waukegan, Illinois
Source: ETO Abatement System Common Stack
Test Date: 3/5/2020
Test Run #: 4
Test Time: 1230-1300

Data Input:

Average chart reading (C):	20.48 **% db**
Average pre/post-test zero calibration reading (C_o):	0.03 **% db**
Calibration gas concentration (C_{ma}):	21.0 **% db**
Average pre/post-test calibration gas reading (C_m):	20.92 **% db**

Sample calculations @ standard conditions (29.92 inches Hg, 68.0 °F):

Stack Oxygen
Corrected for zero and calibration drift:

$$C_{gas} = \left(\overline{C} - C_O\right)\frac{C_{ma}}{C_m - C_O}$$ = **20.563 % db**

USEPA Method 3-A
Stack CO2
Calibration Drift Correction And Emission Rate Calculation

Company: Medline Industries
Location: Waukegan, Illinois
Source: ETO Abatement System Common Stack
Test Date: 3/5/2020
Test Run #: 4
Test Time: 1230-1300

Data Input:

Average chart reading (C):	0.21 **% db**
Average pre/post-test zero calibration reading (C_o):	-0.03 **% db**
Calibration gas concentration (C_{ma}):	2.5 **% db**
Average pre/post-test calibration gas reading (C_m):	2.51 **% db**

Sample calculations @ standard conditions (29.92 inches Hg, 68.0 °F):

Stack CO2
Corrected for zero and calibration drift:

$$C_{gas} = \left(\overline{C} - C_O\right)\frac{C_{ma}}{C_m - C_O}$$ = **0.235 % db**

USEPA Method 320
Ethylene Oxide
Emission Rate Calculation

Company: Medline Industries
Location: Waukegan, Illinois
Source: ETO Abatement System Common Stack
Test Date: 3/5/2020
Test Run #: 4
Test Time: 1230-1300

Data Input:

Average FTIR reading (C):	0.0062	**ppmv wb**
Stack gas volumetric flow rate (Q_{std}):	3,168,463	**scfh**
Compound molecular weight (MW):	44.05	**lb/lb-mole**

Sample calculations @ standard conditions (29.92 inches Hg, 68.0 °F):

Ethylene Oxide
Calculated FTIR Concentration:

= 0.0062 **ppmv wb**
at detection limit

Ethylene Oxide
Calculated FTIR Concentration:

$$C_{gas,lb/scf} = C_{gas} \times \left(\frac{MW\ lb/lb-mole}{385.26 \times 10^6\ ft^3 / lb-mole} \right)$$

= 0.00071 **x 10-6 lb/scf**
at detection limit

$$C_{gas,mg/scm} = C_{gas,lb/dscf} \times 16.0319$$

= 0.0113 **mg/scm**
at detection limit

Ethylene Oxide
Emission rate:

$$E_{gas,lb/hr} = (C_{gas,lb/dscf}) \times (Q_{std})$$

= 0.00224 **lb/hr**
at detection limit

USEPA Method 2
Volumetric Flow Rate Sample Calculations

Client:	Medline Industries
Location:	Waukegan, Illinois
Source:	ETO Abatement System Common Stack
Date:	3/5/2020
Run #:	5
Time:	1325-1355

Data Input

Carbon Dioxide (CO_2):	0.25	**%**
Oxygen (O_2):	20.59	**%**
Nitrogen (N_2):	79.16	**%**
Fractional Moisture Content (B_{wo})	0.001308	**(from Starboost)**
Stack Temperature (T_s):	75.7	**°F**
Pitot Coefficient (C_p):	0.84	**dimensionless**
Average square root of ΔP	0.7906	
Barometric Pressure (P_{bar}):	29.23	**inches Hg**
Static Pressure (S_t)	-0.57	**inches H_2O**
Stack diameter:	60.00	**inches**
Stack width:	n/a	**inches**
Stack length:	n/a	**inches**
Stack area (A_s):	19.6350	**ft^2**

Sample calculations @ standard conditions (29.92 inches Hg, 68.0 °F):

Dry molecular weight of stack ges:

$$M_d = (0.44 \times \%CO_2) + (0.32 \times \%O_2) + (0.28 \times \%N_2)$$ = **28.864 lb/lb-mole**

Molecular weight of stack gas, wet basis:

$$M_s = (M_d \times (1 - B_{ws})) + (18 \times B_{ws})$$ = **28.850 lb/lb-mole**

Absolute stack gas pressure:

$$P_s = P_{bar} + \left(\frac{S_t}{13.6}\right)$$ = **29.188 inches Hg**

Stack gas velocity:

$$V_s = 85.49 \times C_p \times \sqrt{\Delta P} \times \sqrt{\frac{(T_s + 460)}{(P_s \times M_s)}}$$ = **45.283 feet/second**

Stack gas volumetric flow rate:

$$Q_a = A_s \times V_s \times 60$$ = **53,348 acfm**

Stack gas volumetric flow rate, wet basis:

$$Q_{sw} = Q_a \times \left[\left(\frac{528°R}{29.92in.Hg}\right) \times \left(\frac{P_s}{T_s + 460}\right)\right]$$ = **51,295 scfm**

$$Q_{sw} = Q_a \times \left[\left(\frac{528°R}{29.92in.Hg}\right) \times \left(\frac{P_s}{T_s + 460}\right)\right] \times 60$$ = **3,077,705 scfh**

Stack gas volumetric flow rate, dry basis:

$$Q_{std} = Q_{sw} \times (1 - B_{wo})$$ = **51,228 dscfm**

$$Q_{std} = Q_{sw} \times (1 - B_{wo}) \times 60$$ = **3,073,679 dscfh**

USEPA Method 3-A
Stack Oxygen
Calibration Drift Correction And Emission Rate Calculation

Company: Medline Industries
Location: Waukegan, Illinois
Source: ETO Abatement System Common Stack
Test Date: 3/5/2020
Test Run #: 5
Test Time: 1325-1355

Data Input:

Average chart reading (C):	20.49 **% db**
Average pre/post-test zero calibration reading (C_o):	0.02 **% db**
Calibration gas concentration (C_{ma}):	21.0 **% db**
Average pre/post-test calibration gas reading (C_m):	20.90 **% db**

Sample calculations @ standard conditions (29.92 inches Hg, 68.0 °F):

Stack Oxygen
Corrected for zero and calibration drift:

$$C_{gas} = \left(\overline{C} - C_O\right)\frac{C_{ma}}{C_m - C_O}$$ = **20.592 % db**

USEPA Method 3-A
Stack CO2
Calibration Drift Correction And Emission Rate Calculation

Company: Medline Industries
Location: Waukegan, Illinois
Source: ETO Abatement System Common Stack
Test Date: 3/5/2020
Test Run #: 5
Test Time: 1325-1355

Data Input:

Average chart reading (C):	0.21 **% db**
Average pre/post-test zero calibration reading (C_o):	-0.05 **% db**
Calibration gas concentration (C_{ma}):	2.5 **% db**
Average pre/post-test calibration gas reading (C_m):	2.53 **% db**

Sample calculations @ standard conditions (29.92 inches Hg, 68.0 °F):

Stack CO2
Corrected for zero and calibration drift:

$$C_{gas} = \left(\overline{C} - C_O\right)\frac{C_{ma}}{C_m - C_O}$$ = **0.251 % db**

USEPA Method 320
Ethylene Oxide
Emission Rate Calculation

Company: Medline Industries
Location: Waukegan, Illinois
Source: ETO Abatement System Common Stack
Test Date: 3/5/2020
Test Run #: 5
Test Time: 1325-1355

Data Input:

Average FTIR reading (C):	0.0062	**ppmv wb**
Stack gas volumetric flow rate (Q_{std}):	3,077,705	**scfh**
Compound molecular weight (MW):	44.05	**lb/lb-mole**

Sample calculations @ standard conditions (29.92 inches Hg, 68.0 °F):

Ethylene Oxide
Calculated FTIR Concentration:

= 0.0062 **ppmv wb**
at detection limit

Ethylene Oxide
Calculated FTIR Concentration:

$$C_{gas,lb/scf} = C_{gas} \times \left(\frac{MW\ lb/lb-mole}{385.26 \times 10^6\ ft^3 / lb-mole} \right)$$

= 0.00071 **x 10-6 lb/scf**
at detection limit

$$C_{gas,mg/scm} = C_{gas,lb/dscf} \times 16.0319$$

= 0.0113 **mg/scm**
at detection limit

Ethylene Oxide
Emission rate:

$$E_{gas,lb/hr} = (C_{gas,lb/dscf}) \times (Q_{std})$$

= 0.00217 **lb/hr**
at detection limit

USEPA Method 2
Volumetric Flow Rate Sample Calculations

Client:	Medline Industries
Location:	Waukegan, Illinois
Source:	ETO Abatement System Common Stack
Date:	3/5/2020
Run #:	6
Time:	1420-1450

Data Input

Carbon Dioxide (CO_2):	0.30	**%**
Oxygen (O_2):	20.63	**%**
Nitrogen (N_2):	79.08	**%**
Fractional Moisture Content (B_{wo})	0.001314	**(from Starboost)**
Stack Temperature (T_s):	77.5	**°F**
Pitot Coefficient (C_p):	0.84	**dimensionless**
Average square root of ΔP	0.8147	
Barometric Pressure (P_{bar}):	29.23	**inches Hg**
Static Pressure (S_t)	-0.51	**inches H_2O**
Stack diameter:	60.00	**inches**
Stack width:	n/a	**inches**
Stack length:	n/a	**inches**
Stack area (A_s):	19.6350	**ft^2**

Sample calculations @ standard conditions (29.92 inches Hg, 68.0 °F):

Dry molecular weight of stack gas:

$$M_d = (0.44 \times \%CO_2) + (0.32 \times \%O_2) + (0.28 \times \%N_2)$$ = **28.873 lb/lb-mole**

Molecular weight of stack gas, wet basis:

$$M_s = (M_d \times (1 - B_{ws})) + (18 \times B_{ws})$$ = **28.858 lb/lb-mole**

Absolute stack gas pressure:

$$P_s = P_{bar} + \left(\frac{S_t}{13.6}\right)$$ = **29.193 inches Hg**

Stack gas velocity:

$$V_s = 85.49 \times C_p \times \sqrt{\Delta P} \times \sqrt{\frac{(T_s + 460)}{(P_s \times M_s)}}$$ = **46.732 feet/second**

Stack gas volumetric flow rate:

$$Q_a = A_s \times V_s \times 60$$ = **55,054 acfm**

Stack gas volumetric flow rate, wet basis:

$$Q_{sw} = Q_a \times \left[\left(\frac{528°R}{29.92in.Hg}\right) \times \left(\frac{P_s}{T_s + 460}\right)\right]$$ = **52,766 scfm**

$$Q_{sw} = Q_a \times \left[\left(\frac{528°R}{29.92in.Hg}\right) \times \left(\frac{P_s}{T_s + 460}\right)\right] \times 60$$ = **3,165,972 scfh**

Stack gas volumetric flow rate, dry basis:

$$Q_{std} = Q_{sw} \times (1 - B_{wo})$$ = **52,697 dscfm**

$$Q_{std} = Q_{sw} \times (1 - B_{wo}) \times 60$$ = **3,161,810 dscfh**

USEPA Method 3-A
Stack Oxygen
Calibration Drift Correction And Emission Rate Calculation

Company: Medline Industries
Location: Waukegan, Illinois
Source: ETO Abatement System Common Stack
Test Date: 3/5/2020
Test Run #: 6
Test Time: 1420-1450

Data Input:

Average chart reading (C):	20.50 **% db**
Average pre/post-test zero calibration reading (C_o):	-0.01 **% db**
Calibration gas concentration (C_{ma}):	21.0 **% db**
Average pre/post-test calibration gas reading (C_m):	20.87 **% db**

Sample calculations @ standard conditions (29.92 inches Hg, 68.0 °F):

Stack Oxygen
Corrected for zero and calibration drift:

$$C_{gas} = \left(\overline{C} - C_o\right)\frac{C_{ma}}{C_m - C_o}$$ = **20.626 % db**

USEPA Method 3-A
Stack CO2
Calibration Drift Correction And Emission Rate Calculation

Company: Medline Industries
Location: Waukegan, Illinois
Source: ETO Abatement System Common Stack
Test Date: 3/5/2020
Test Run #: 6
Test Time: 1420-1450

Data Input:

Average chart reading (C):	0.22 **% db**
Average pre/post-test zero calibration reading (C_o):	-0.09 **% db**
Calibration gas concentration (C_{ma}):	2.5 **% db**
Average pre/post-test calibration gas reading (C_m):	2.54 **% db**

Sample calculations @ standard conditions (29.92 inches Hg, 68.0 °F):

Stack CO2
Corrected for zero and calibration drift:

$$C_{gas} = \left(\overline{C} - C_O\right)\frac{C_{ma}}{C_m - C_O}$$ = **0.297 % db**

USEPA Method 320
Ethylene Oxide
Emission Rate Calculation

Company: Medline Industries
Location: Waukegan, Illinois
Source: ETO Abatement System Common Stack
Test Date: 3/5/2020
Test Run #: 6
Test Time: 1420-1450

Data Input:

Average FTIR reading (C):	0.0118	**ppmv wb**
Stack gas volumetric flow rate (Q_{std}):	3,165,972	**scfh**
Compound molecular weight (MW):	44.05	**lb/lb-mole**

Sample calculations @ standard conditions (29.92 inches Hg, 68.0 °F):

Ethylene Oxide
Calculated FTIR Concentration:

= 0.0118 **ppmv wb**

Ethylene Oxide
Calculated FTIR Concentration:

$$C_{gas,lb/scf} = C_{gas} \times \left(\frac{MW\ lb/lb-mole}{385.26 \times 10^6\ ft^3 / lb-mole} \right)$$

= 0.00135 **x 10-6 lb/scf**

$$C_{gas,mg/scm} = C_{gas,lb/dscf} \times 16.0319$$

= 0.0216 **mg/scm**

Ethylene Oxide
Emission rate:

$$E_{gas,lb/hr} = \left(C_{gas,lb/dscf}\right) x \left(Q_{std}\right)$$

= 0.00427 **lb/hr**

USEPA Method 2
Volumetric Flow Rate Sample Calculations

Client:	Medline Industries
Location:	Waukegan, Illinois
Source:	ETO Abatement System Common Stack
Date:	3/5/2020
Run #:	7
Time:	1512-1542

Data Input

Carbon Dioxide (CO_2):	0.27	**%**
Oxygen (O_2):	20.60	**%**
Nitrogen (N_2):	79.12	**%**
Fractional Moisture Content (B_{wo})	0.001317	**(from Starboost)**
Stack Temperature (T_s):	78.0	**°F**
Pitot Coefficient (C_p):	0.84	**dimensionless**
Average square root of ΔP	0.7992	
Barometric Pressure (P_{bar}):	29.23	**inches Hg**
Static Pressure (S_t)	-0.48	**inches H_2O**
Stack diameter:	60.00	**inches**
Stack width:	n/a	**inches**
Stack length:	n/a	**inches**
Stack area (A_s):	19.6350	**ft^2**

Sample calculations @ standard conditions (29.92 inches Hg, 68.0 °F):

Dry molecular weight of stack gas:

$$M_d = (0.44 \times \%CO_2) + (0.32 \times \%O_2) + (0.28 \times \%N_2)$$ = **28.868 lb/lb-mole**

Molecular weight of stack gas, wet basis:

$$M_s = (M_d \times (1 - B_{ws})) + (18 \times B_{ws})$$ = **28.854 lb/lb-mole**

Absolute stack gas pressure:

$$P_s = P_{bar} + \left(\frac{S_t}{13.6}\right)$$ = **29.195 inches Hg**

Stack gas velocity:

$$V_s = 85.49 \times C_p \times \sqrt{\Delta P} \times \sqrt{\frac{(T_s + 460)}{(P_s \times M_s)}}$$ = **45.866 feet/second**

Stack gas volumetric flow rate:

$$Q_a = A_s \times V_s \times 60$$ = **54,034 acfm**

Stack gas volumetric flow rate, wet basis:

$$Q_{sw} = Q_a \times \left[\left(\frac{528°R}{29.92in.Hg}\right) \times \left(\frac{P_s}{T_s + 460}\right)\right]$$ = **51,744 scfm**

$$Q_{sw} = Q_a \times \left[\left(\frac{528°R}{29.92in.Hg}\right) \times \left(\frac{P_s}{T_s + 460}\right)\right] \times 60$$ = **3,104,662 scfh**

Stack gas volumetric flow rate, dry basis:

$$Q_{std} = Q_{sw} \times (1 - B_{wo})$$ = **51,676 dscfm**

$$Q_{std} = Q_{sw} \times (1 - B_{wo}) \times 60$$ = **3,100,574 dscfh**

USEPA Method 3-A
Stack Oxygen
Calibration Drift Correction And Emission Rate Calculation

Company: Medline Industries
Location: Waukegan, Illinois
Source: ETO Abatement System Common Stack
Test Date: 3/5/2020
Test Run #: 7
Test Time: 1512-1542

Data Input:

Average chart reading (C):	20.52 **% db**
Average pre/post-test zero calibration reading (C_o):	0.01 **% db**
Calibration gas concentration (C_{ma}):	21.0 **% db**
Average pre/post-test calibration gas reading (C_m):	20.91 **% db**

Sample calculations @ standard conditions (29.92 inches Hg, 68.0 °F):

Stack Oxygen
Corrected for zero and calibration drift:

$$C_{gas} = \left(\overline{C} - C_O\right)\frac{C_{ma}}{C_m - C_O}$$ = **20.604 % db**

USEPA Method 3-A
Stack CO2
Calibration Drift Correction And Emission Rate Calculation

Company: Medline Industries
Location: Waukegan, Illinois
Source: ETO Abatement System Common Stack
Test Date: 3/5/2020
Test Run #: 7
Test Time: 1512-1542

Data Input:

Average chart reading (C):	0.22 **% db**
Average pre/post-test zero calibration reading (C_o):	-0.06 **% db**
Calibration gas concentration (C_{ma}):	2.5 **% db**
Average pre/post-test calibration gas reading (C_m):	2.55 **% db**

Sample calculations @ standard conditions (29.92 inches Hg, 68.0 °F):

Stack CO2
Corrected for zero and calibration drift:

$$C_{gas} = \left(\overline{C} - C_O\right)\frac{C_{ma}}{C_m - C_O}$$ = **0.273 % db**

USEPA Method 320
Ethylene Oxide
Emission Rate Calculation

Company: Medline Industries
Location: Waukegan, Illinois
Source: ETO Abatement System Common Stack
Test Date: 3/5/2020
Test Run #: 7
Test Time: 1512-1542

Data Input:

Average FTIR reading (C):	0.0123	**ppmv wb**
Stack gas volumetric flow rate (Q_{std}):	3,104,662	**scfh**
Compound molecular weight (MW):	44.05	**lb/lb-mole**

Sample calculations @ standard conditions (29.92 inches Hg, 68.0 °F):

Ethylene Oxide
Calculated FTIR Concentration:

= 0.0123 **ppmv wb**

Ethylene Oxide
Calculated FTIR Concentration:

$$C_{gas,lb/scf} = C_{gas} \times \left(\frac{MW\ lb/lb-mole}{385.26 \times 10^6\ ft^3 / lb-mole} \right)$$

= 0.00141 **x 10-6 lb/scf**

$$C_{gas,mg/scm} = C_{gas,lb/dscf} \times 16.0319$$

= 0.0225 **mg/scm**

Ethylene Oxide
Emission rate:

$$E_{gas,lb/hr} = (C_{gas,lb/dscf}) \times (Q_{std})$$

= 0.00437 **lb/hr**

USEPA Method 2
Volumetric Flow Rate Sample Calculations

Client:	Medline Industries
Location:	Waukegan, Illinois
Source:	ETO Abatement System Common Stack
Date:	3/5/2020
Run #:	8
Time:	1609-1639

Data Input

Carbon Dioxide (CO_2):	0.23	**%**
Oxygen (O_2):	20.59	**%**
Nitrogen (N_2):	79.18	**%**
Fractional Moisture Content (B_{wo})	0.001251	**(from Starboost)**
Stack Temperature (T_s):	75.9	**°F**
Pitot Coefficient (C_p):	0.84	**dimensionless**
Average square root of ΔP	0.7881	
Barometric Pressure (P_{bar}):	29.23	**inches Hg**
Static Pressure (S_t)	-0.41	**inches H_2O**
Stack diameter:	60.00	**inches**
Stack width:	n/a	**inches**
Stack length:	n/a	**inches**
Stack area (A_s):	19.6350	**ft^2**

Sample calculations @ standard conditions (29.92 inches Hg, 68.0 °F):

Dry molecular weight of stack gas:

$$M_d = (0.44 \times \%CO_2) + (0.32 \times \%O_2) + (0.28 \times \%N_2)$$ = **28.861 lb/lb-mole**

Molecular weight of stack gas, wet basis:

$$M_s = (M_d \times (1 - B_{ws})) + (18 \times B_{ws})$$ = **28.847 lb/lb-mole**

Absolute stack gas pressure:

$$P_s = P_{bar} + \left(\frac{S_t}{13.6}\right)$$ = **29.200 inches Hg**

Stack gas velocity:

$$V_s = 85.49 \times C_p \times \sqrt{\Delta P} \times \sqrt{\frac{(T_s + 460)}{(P_s \times M_s)}}$$ = **45.142 feet/second**

Stack gas volumetric flow rate:

$$Q_a = A_s \times V_s \times 60$$ = **53,181 acfm**

Stack gas volumetric flow rate, wet basis:

$$Q_{sw} = Q_a \times \left[\left(\frac{528°R}{29.92in.Hg}\right) \times \left(\frac{P_s}{T_s + 460}\right)\right]$$ = **51,136 scfm**

$$Q_{sw} = Q_a \times \left[\left(\frac{528°R}{29.92in.Hg}\right) \times \left(\frac{P_s}{T_s + 460}\right)\right] \times 60$$ = **3,068,153 scfh**

Stack gas volumetric flow rate, dry basis:

$$Q_{std} = Q_{sw} \times (1 - B_{wo})$$ = **51,072 dscfm**

$$Q_{std} = Q_{sw} \times (1 - B_{wo}) \times 60$$ = **3,064,314 dscfh**

USEPA Method 3-A
Stack Oxygen
Calibration Drift Correction And Emission Rate Calculation

Company: Medline Industries
Location: Waukegan, Illinois
Source: ETO Abatement System Common Stack
Test Date: 3/5/2020
Test Run #: 8
Test Time: 1609-1639

Data Input:

Average chart reading (C):	20.54 **% db**
Average pre/post-test zero calibration reading (C_o):	0.04 **% db**
Calibration gas concentration (C_{ma}):	21.0 **% db**
Average pre/post-test calibration gas reading (C_m):	20.95 **% db**

Sample calculations @ standard conditions (29.92 inches Hg, 68.0 °F):

Stack Oxygen
Corrected for zero and calibration drift:

$$C_{gas} = \left(\overline{C} - C_O\right)\frac{C_{ma}}{C_m - C_O}$$ = **20.587 % db**

USEPA Method 3-A
Stack CO2
Calibration Drift Correction And Emission Rate Calculation

Company: Medline Industries
Location: Waukegan, Illinois
Source: ETO Abatement System Common Stack
Test Date: 3/5/2020
Test Run #: 8
Test Time: 1609-1639

Data Input:

Average chart reading (C):	0.21 **% db**
Average pre/post-test zero calibration reading (C_o):	-0.03 **% db**
Calibration gas concentration (C_{ma}):	2.5 **% db**
Average pre/post-test calibration gas reading (C_m):	2.56 **% db**

Sample calculations @ standard conditions (29.92 inches Hg, 68.0 °F):

Stack CO2
Corrected for zero and calibration drift:

$$C_{gas} = \left(\overline{C} - C_O\right)\frac{C_{ma}}{C_m - C_O} = \mathbf{0.232\ \%\ db}$$

USEPA Method 320
Ethylene Oxide
Emission Rate Calculation

Company: Medline Industries
Location: Waukegan, Illinois
Source: ETO Abatement System Common Stack
Test Date: 3/5/2020
Test Run #: 8
Test Time: 1609-1639

Data Input:

Average FTIR reading (C):	0.0090	**ppmv wb**
Stack gas volumetric flow rate (Q_{std}):	3,068,153	**scfh**
Compound molecular weight (MW):	44.05	**lb/lb-mole**

Sample calculations @ standard conditions (29.92 inches Hg, 68.0 °F):

Ethylene Oxide
Calculated FTIR Concentration:

= 0.0090 **ppmv wb**

Ethylene Oxide
Calculated FTIR Concentration:

$$C_{gas,lb/scf} = C_{gas} \times \left(\frac{MW\ lb/lb-mole}{385.26 \times 10^6\ ft^3\ /\ lb-mole} \right)$$

= 0.00103 **x 10-6 lb/scf**

$$C_{gas,mg/scm} = C_{gas,lb/dscf} \times 16.0319$$

= 0.0165 **mg/scm**

Ethylene Oxide
Emission rate:

$$E_{gas,lb/hr} = \left(C_{gas,lb/dscf}\right) \times \left(Q_{std}\right)$$

= 0.00315 **lb/hr**

USEPA Method 2
Volumetric Flow Rate Sample Calculations

Client:	Medline Industries
Location:	Waukegan, Illinois
Source:	ETO Abatement System Common Stack
Date:	3/5/2020
Run #:	9
Time:	1708-1738

Data Input

Carbon Dioxide (CO_2):	0.23	**%**
Oxygen (O_2):	20.61	**%**
Nitrogen (N_2):	79.17	**%**
Fractional Moisture Content (B_{wo})	0.001243	**(from Starboost)**
Stack Temperature (T_s):	74.9	**°F**
Pitot Coefficient (C_p):	0.84	**dimensionless**
Average square root of ΔP	0.8069	
Barometric Pressure (P_{bar}):	29.23	**inches Hg**
Static Pressure (S_t)	-0.43	**inches H_2O**
Stack diameter:	60.00	**inches**
Stack width:	n/a	**inches**
Stack length:	n/a	**inches**
Stack area (A_s):	19.6350	**ft^2**

Sample calculations @ standard conditions (29.92 inches Hg, 68.0 °F):

Dry molecular weight of stack gas:

$$M_d = (0.44 \times \%CO_2) + (0.32 \times \%O_2) + (0.28 \times \%N_2)$$ = **28.861 lb/lb-mole**

Molecular weight of stack gas, wet basis:

$$M_s = (M_d \times (1 - B_{ws})) + (18 \times B_{ws})$$ = **28.847 lb/lb-mole**

Absolute stack gas pressure:

$$P_s = P_{bar} + \left(\frac{S_t}{13.6}\right)$$ = **29.198 inches Hg**

Stack gas velocity:

$$V_s = 85.49 \times C_p \times \sqrt{\Delta P} \times \sqrt{\frac{(T_s + 460)}{(P_s \times M_s)}}$$ = **46.176 feet/second**

Stack gas volumetric flow rate:

$$Q_a = A_s \times V_s \times 60$$ = **54,400 acfm**

Stack gas volumetric flow rate, wet basis:

$$Q_{sw} = Q_a \times \left[\left(\frac{528°R}{29.92in.Hg}\right) \times \left(\frac{P_s}{T_s + 460}\right)\right]$$ = **52,403 scfm**

$$Q_{sw} = Q_a \times \left[\left(\frac{528°R}{29.92in.Hg}\right) \times \left(\frac{P_s}{T_s + 460}\right)\right] \times 60$$ = **3,144,176 scfh**

Stack gas volumatric flow rate, dry basis:

$$Q_{std} = Q_{sw} \times (1 - B_{wo})$$ = **52,338 dscfm**

$$Q_{std} = Q_{sw} \times (1 - B_{wo}) \times 60$$ = **3,140,266 dscfh**

USEPA Method 3-A
Stack Oxygen
Calibration Drift Correction And Emission Rate Calculation

Company: Medline Industries
Location: Waukegan, Illinois
Source: ETO Abatement System Common Stack
Test Date: 3/5/2020
Test Run #: 9
Test Time: 1708-1738

Data Input:

Average chart reading (C):	20.53 **% db**
Average pre/post-test zero calibration reading (C_o):	0.05 **% db**
Calibration gas concentration (C_{ma}):	21.0 **% db**
Average pre/post-test calibration gas reading (C_m):	20.92 **% db**

Sample calculations @ standard conditions (29.92 inches Hg, 68.0 °F):

Stack Oxygen
Corrected for zero and calibration drift:

$$C_{gas} = \left(\overline{C} - C_O\right)\frac{C_{ma}}{C_m - C_O}$$ = **20.605 % db**

USEPA Method 3-A
Stack CO2
Calibration Drift Correction And Emission Rate Calculation

Company: Medline Industries
Location: Waukegan, Illinois
Source: ETO Abatement System Common Stack
Test Date: 3/5/2020
Test Run #: 9
Test Time: 1708-1738

Data Input:

Average chart reading (C):	0.21 **% db**
Average pre/post-test zero calibration reading (C_o):	-0.03 **% db**
Calibration gas concentration (C_{ma}):	2.5 **% db**
Average pre/post-test calibration gas reading (C_m):	2.54 **% db**

Sample calculations @ standard conditions (29.92 inches Hg, 68.0 °F):

Stack CO2
Corrected for zero and calibration drift:

$$C_{gas} = \left(\overline{C} - C_o\right)\frac{C_{ma}}{C_m - C_o}$$ = **0.230 % db**

USEPA Method 320
Ethylene Oxide
Emission Rate Calculation

Company: Medline Industries
Location: Waukegan, Illinois
Source: ETO Abatement System Common Stack
Test Date: 3/5/2020
Test Run #: 9
Test Time: 1708-1738

Data Input:

Average FTIR reading (C):	0.0134	**ppmv wb**
Stack gas volumetric flow rate (Q_{std}):	3,144,176	**scfh**
Compound molecular weight (MW):	44.05	**lb/lb-mole**

Sample calculations @ standard conditions (29.92 inches Hg, 68.0 °F):

Ethylene Oxide
Calculated FTIR Concentration:

= 0.0134 **ppmv wb**

Ethylene Oxide
Calculated FTIR Concentration:

$$C_{gas,lb/scf} = C_{gas} \times \left(\frac{MW\ lb/lb-mole}{385.26 \times 10^6\ ft^3 / lb-mole} \right)$$

= 0.00153 **x 10-6 lb/scf**

$$C_{gas,mg/scm} = C_{gas,lb/dscf} \times 16.0319$$

= 0.0246 **mg/scm**

Ethylene Oxide
Emission rate:

$$E_{gas,lb/hr} = (C_{gas,lb/dscf}) \times (Q_{std})$$

= 0.00482 **lb/hr**

APPENDIX B
FIELD DATA

TRAVERSE POINT LOCATION FOR CIRCULAR AND RECTANGULAR DUCTS

Plant: Medline Industries
Date: 3/5/2020
Sampling Location: ETO Abatement System Common Stack
Particulate or Velocity Traverse? Velocity

TEST PORT LOCATION:

Nearest Upstream Distance from Disturbance (A)	120.0	(inches)
Nearest Downstream Distance from Disturbance (B)	498.0	(inches)

CIRCULAR DUCT DIMENSIONS:

Inside of Far Wall to Outside of Port (Distance C)	66.00	(inches)
Inside of Near Wall to Outside of Port (Distance D)	6.00	(inches)
Circular Stack Diameter	60.00	(inches)

RECTANGULAR DUCT DIMENSIONS:

Duct Dimensions (Rectangular)	n/a	Width (inches)
	n/a	Depth (inches)
Inside of Near Wall to Outside of Port (Distance D)	n/a	(inches)
Duct Equivilent Diameter (Rectangular)	n/a	Eq. Dia. (inches)

$$Eq.\ Diam = \frac{2 \times L \times W}{L + W}$$

UPSTREAM AND DOWNSTREAM DISTURBANCE LOCATION:

Disturbance A Diameters (A diams.)	2.0	diameters
Disturbance B Diameters (B diams.)	8.3	diameters

RESULTANT TRAVERSE POINTS FOR VELOCITY MEASUREMENT:

Total Number of Traverse Points Used	16.0	
Total Number of Test Ports	2.0	*(use first half of test points on circular stacks
Points Per Port*	8.0	if using more that two test ports)

Traverse Point Number	Fraction of Stack I.D.	Stack I.D.	Product of Columns 1 and 2 (to nearest 1/10 inch)	Distance D (Port Depth)	Traverse Point Location From Outside of Port (sum of columns 3 and 4)
1	3.20	60.00	1.92	6.00	7.92
2	10.50	60.00	6.30	6.00	12.30
3	19.40	60.00	11.64	6.00	17.64
4	32.30	60.00	19.38	6.00	25.38
5	67.70	60.00	40.62	6.00	46.62
6	80.60	60.00	48.36	6.00	54.36
7	89.50	60.00	53.70	6.00	59.70
8	96.80	60.00	58.08	6.00	64.08
9					
10					
11					
12					
13					
14	CEMS:				
15	16.7	60.0	10.02	6.00	16.02
16	50.0	60.0	30.00	6.00	36.00
17	83.3	60.0	49.98	6.00	55.98
18					
19					
20					
21					
22					
23					
24					

Google Account | New weather - wjames@m

mail.google.com/mail/u/2/?tab=rm1&pli=1#all/WhctKJVq...

Back

Full Observation

Current Location
Park City IL

Observation Station

ID: KUGN
Name: Chicago/Waukegan Regional Airport
State: IL
Latitude: 42.43
Longitude: -87.86
Elevation: 709 ft.
Last Updated: 5 Mar 08:55 am CST

Current Conditions

Temperature:	42°F (6°C)
Weather:	Partly Cloudy
Humidity:	49%
Wind Speed:	S 20 MPH
Wind Gust:	31 MPH
Barometer:	29.94 in. (1014.8 mb)
Dew Point:	24°F (-4°C)
Wind Chill:	33°F (1°C)
Heat Index:	N/A
Visibility:	10.00 mi.

MONTROSE AIR QUALITY SERVICES

VELOCITY TRAVERSE AND CYCLONIC FLOW VERIFICATION

PLANT: Medline
DATE: 3/5/2020
LOCATION: Waukegan, IL
SOURCE: Common stack
STACK ID: 60
PROBE #/TC #: 703
BAROMETRIC PRESSURE, in. Hg: 29.23
OPERATORS: JC, VK

SCHEMATIC OF TRAVERSE POINT LAYOUT

RUN NO. 1
STATIC, in. H_2O: -0.44
START: 9:24 STOP: 9:34
PRE-TEST: +/- OK POST-TEST: +/- OK

TRAVERSE POINT NUMBER	VELOCITY HEAD, ΔP (in. H_2O)	STACK TEMP. (°F)	YAW ANGLE (°)
1	0.55	69	
2	0.60	~~6~~ 72	
3	0.62	72	
4	0.69	73	
5	0.72	73	
6	0.74	73	
7	0.70	73	
8	0.65	73	
1	0.65	73	
2	0.73	73	
3	0.79	73	
4	0.63	73	
5	0.62	73	
6	0.65	74	
7	0.67	73	
8	0.63	73	
AVERAGE	0.8147	72.7	

RUN NO. 2
STATIC, in. H_2O: -0.42
START: 10:18 STOP: 10:25
PRE-TEST: +/- OK POST-TEST: +/- OK

TRAVERSE POINT NUMBER	VELOCITY HEAD, ΔP (in. H_2O)	STACK TEMP. (°F)	YAW ANGLE (°)
1	0.52	75	
2	0.53	75	
3	0.65	75	
4	0.63	75	
5	0.70	75	
6	0.73	75	
7	0.70	75	
8	0.63	75	
1	0.61	75	
2	0.65	75	
3	0.65	75	
4	0.68	75	
5	0.73	75	
6	0.71	75	
7	0.70	75	
8	0.65	75	
AVERAGE	0.6080	75.0	

Form FDF 4005.00

MONTROSE AIR QUALITY SERVICES

VELOCITY TRAVERSE AND CYCLONIC FLOW VERIFICATION

PLANT: Medline
DATE: 3/5/2020
LOCATION: Waukegan, IL
SOURCE: Common Stack
STACK ID: 60
PROBE #/TC #: 703
BAROMETRIC PRESSURE, in. Hg: 29.23
OPERATORS: JC/VK

SCHEMATIC OF TRAVERSE POINT LAYOUT

RUN NO. 3
STATIC, in. H_2O: -0.54
START: 11:30 STOP: 11:38
PRE-TEST: +/-ok POST-TEST: +/-ok

TRAVERSE POINT NUMBER	VELOCITY HEAD, ΔP (in. H_2O)*	STACK TEMP. (°F)	YAW ANGLE (°)
1	~~0.62~~ 0.62	75	
2	0.58	75	
3	0.61	75	
4	0.63	75	
5	0.64	75	
6	0.67	75	
7	0.72	75	
8	0.62	75	
1	0.52	74	
2	0.61	75	
3	0.63	75	
4	0.64	75	
5	0.68	75	
6	0.69	75	
7	0.71	75	
8	0.69	75	
AVERAGE	0.8002	74.9	

*JC 3/5/20

RUN NO. 4
STATIC, in. H_2O: -0.51
START: 12:30 STOP: 12:38
PRE-TEST: +/-ok POST-TEST: +/-ok

TRAVERSE POINT NUMBER	VELOCITY HEAD, ΔP (in. H_2O)	STACK TEMP. (°F)	YAW ANGLE (°)
1	0.59	74	
2	0.62	74	
3	0.64	75	
4	0.69	75	
5	0.64	75	
6	0.68	~~75~~ 75	
7	0.66	75	
8	0.65	75	
1	0.61	75	
2	0.63	75*	
3	0.65	~~75~~	75
4	0.69	75	
5	0.68	75	
6	0.71	75	
7	0.70	75	
8	0.75	75	
AVERAGE	0.8132	74.9	

Form FDF 4005.00

MONTROSE AIR QUALITY SERVICES

VELOCITY TRAVERSE AND CYCLONIC FLOW VERIFICATION

PLANT: Medline
DATE: 3/5/2020
LOCATION: Waukegan, IL
SOURCE: Common Stack
STACK ID: 60
PROBE #/TC #: 703
BAROMETRIC PRESSURE, in. Hg: 29.23
OPERATORS: JC/VK

SCHEMATIC OF TRAVERSE POINT LAYOUT

RUN NO. 5
STATIC, in. H_2O: -0.57
START: 1325 STOP: 1355
PRE-TEST: +/-0k POST-TEST: +/-0k

TRAVERSE POINT NUMBER	VELOCITY HEAD, ΔP (in. H_2O)	STACK TEMP. (°F)	YAW ANGLE (°)
1	0.53	75	
2	0.59	75	
3	0.62	76	
4	0.61	76	
5	0.67	76	
6	0.65	76	
7	0.62	76	
8	0.60	74	
1	0.60	75	
2	0.64	76	
3	0.65	76	
4	0.63	76	
5	0.64	76	
6	0.60	76	
7	0.69	76	
8	0.67	76	
AVERAGE	0.7006	75.7	

RUN NO. 6
STATIC, in. H_2O: -0.51
START: 14:20 STOP: 14:50
PRE-TEST: +/-0k POST-TEST: +/-0k

TRAVERSE POINT NUMBER	VELOCITY HEAD, ΔP (in. H_2O)	STACK TEMP. (°F)	YAW ANGLE (°)
1	0.50	77	
2	0.57	77	
3	0.60	77	
4	0.65	78	
5	0.68	78	
6	0.71	78	
7	0.67	78	
8	0.60	78	
1	0.65	77	
2	0.71	77	
3	0.67	78	
4	0.67	78	
5	0.70	78	
6	0.73	77	
7	0.75	77	
8	0.79	77	
AVERAGE	~~0.8193~~ 0.8147 (WOO)	77.5	

Form FDF 4005.00

MONTROSE AIR QUALITY SERVICES

VELOCITY TRAVERSE AND CYCLONIC FLOW VERIFICATION

PLANT: Medline
DATE: 3/5/2020
LOCATION: Waukegan, IL
SOURCE: Common Stack
STACK ID: 60"
PROBE #/TC #: 703
BAROMETRIC PRESSURE, in. Hg: 29.23
OPERATORS: JC/UK

SCHEMATIC OF TRAVERSE POINT LAYOUT

RUN NO. 7
STATIC, in. H_2O: -0.48
START: 15:12 STOP: 15:42
PRE-TEST: +/-0K POST-TEST: +/-0K

TRAVERSE POINT NUMBER	VELOCITY HEAD, ΔP (in. H_2O)	STACK TEMP. (°F)	YAW ANGLE (°)
1	0.71	78	
2	0.69	78	
3	0.64	78	
4	0.63	78	
5	0.60	78	
6	0.61	78	
7	0.64	78	
8	0.69	78	
1	0.52	78	
2	0.55	78	
3	0.61	78	
4	0.60	78	
5	0.65	78	
6	0.69	78	
7	0.71	78	
8	0.70	78	
AVERAGE	0.7992	78.0	

RUN NO. 8
STATIC, in. H_2O: -0.41
START: 16:07 STOP: 16:37
PRE-TEST: +/-0K POST-TEST: +/-0K

TRAVERSE POINT NUMBER	VELOCITY HEAD, ΔP (in. H_2O)	STACK TEMP. (°F)	YAW ANGLE (°)
1	0.68	76	
2	0.63	76	
3	0.60	76	
4	0.62	77	
5	0.60	76	
6	0.64	76	
7	0.65	76	
8	0.68	76	
1	0.51	74	
2	0.58	75	
3	0.60	76	
4	0.60	76	
5	0.65	76	
6	0.65	76	
7	0.66	76	
8	0.60	76	
AVERAGE	0.7061	75.9	

Form FDF 4005.00

MONTROSE AIR QUALITY SERVICES

VELOCITY TRAVERSE AND CYCLONIC FLOW VERIFICATION

PLANT: Medline
DATE: 3/5/2020
LOCATION: Waukegan, IL
SOURCE: Common stack
STACK ID: 60"
PROBE #/TC #: 703
BAROMETRIC PRESSURE, in. Hg: 29.23
OPERATORS: JC/VK

SCHEMATIC OF TRAVERSE POINT LAYOUT

RUN NO. 9
STATIC, in. H_2O: -0.43
START: 17:08 STOP: 17:38
PRE-TEST: +/-ok POST-TEST: +/-ok

TRAVERSE POINT NUMBER	VELOCITY HEAD, ΔP (in. H_2O)	STACK TEMP. (°F)	YAW ANGLE (°)
1	0.71	75 *	
2	0.72	~~78~~	75
3	0.68	75	
4	0.61	75	
5	0.64	75	
6	0.70	75	
7	0.71	75	
8	0.71	75	
1	0.51	74	
2	0.55	74	
3	0.62	75	
4	0.60	75	
5	0.63	75	
6	0.69	75	
7	0.70	75	
8	0.66	75	
AVERAGE	0.8069	74.9	

✓ * JC 3/5/20

RUN NO. 10
STATIC, in. H_2O: _____
START: _____ STOP: _____
PRE-TEST: +/-ok POST-TEST: _____

TRAVERSE POINT NUMBER	VELOCITY HEAD, ΔP (in. H_2O)	STACK TEMP. (°F)	YAW ANGLE (°)
1			
2			
3			
4			
5			
6			
7			
8			
1			
2			
3			
4			
5			
6			
7			
8			
AVERAGE			

Form FDF 4005.00

MONTROSE
AIR QUALITY SERVICES

VELOCITY TRAVERSE AND CYCLONIC FLOW VERIFICATION

PLANT Medline
DATE 2/28/2020
LOCATION Waukegan, IL
SOURCE Common Stack
STACK ID 60
PROBE #/TC # 703
BAROMETRIC PRESSURE, in. Hg 29.30
OPERATORS JC, VK

RUN NO. 1-PRE
STATIC, in. H_2O -0.53
START: 10:03 STOP: 10:11
PRE-TEST: +/- OK POST-TEST: +/- OK

TRAVERSE POINT NUMBER	VELOCITY HEAD, ΔP (in. H_2O)	STACK TEMP. (°F)	YAW ANGLE (°)
1	0.65	67	3
2	0.68	67	5
3	0.69	68	8
4	0.71	68	4
5	0.70	68	6
6	0.68	68	11
7	0.67	68	9
8	0.65	68	3
1	0.60	67	0
2	0.61	68	6
3	0.61	68	1
4	0.71	68	5
5	0.75	68	7
6	0.72	68	12
7	0.62	68	13
8	0.64	68	14
AVERAGE	0.8170	67.8	

SCHEMATIC OF TRAVERSE POINT LAYOUT

RUN NO. ~~2~~ N/A (MT)
STATIC, in. H_2O -0.58
START: ~~10:45~~ * ~~10:50~~ 11:20 STOP: 10:55 * 11:25
PRE-TEST: +/- OK * POST-TEST: +/- OK

TRAVERSE POINT NUMBER	VELOCITY HEAD, ΔP (in. H_2O)	STACK TEMP. (°F) *	YAW ANGLE (°)
1	0.53	~~62~~ 67	
2	0.62	67	
3	0.68	68	
4	0.66	68	
5	0.63	68	
6	0.70	68	
7	0.71	68	
8	0.67	68	
1	0.56	68	
2	0.63	68	
3	0.61	68	
4	0.69	68	
5	0.76	68	
6	0.79	68	
7	0.80	68	
8	0.78	68	
AVERAGE	0.8210	67.9	

N/A (MT)

Form FDF 4005.00
* JC 2/28

APPENDIX C
REFERENCE METHOD MONITORING DATA

Reference Method Monitor Data
One-Minute Averages

Company: Medline Industries
Location: Waukegan, Illinois
Source: ETO Abatement System Common Stack
Test Date: 03/05/20
Run #: 1
Test Time: 0923-0953

Reference Method Monitor #1:	
Analyzer Type:	**Stack Oxygen**
Analyzer Scale:	21.00 %
Pre-test calibration span value:	20.96 %
Post-test calibration span value	20.92 %
Pre-test calibration zero value:	0.05 %
Post-test calibration zero value:	0.03 %
Calibration gas type:	Protocol 1 Oxygen %
Calibration gas concentration:	21.00 %
Monitor uncorrected average:	20.58 %
Monitor drift corrected average:	**20.64 %**

Reference Method Monitor #2:	
Analyzer Type:	**Stack CO2**
Analyzer Scale:	5.00 %
Pre-test calibration span value:	2.51 %
Post-test calibration span value	2.52 %
Pre-test calibration zero value:	0.00 %
Post-test calibration zero value:	0.02 %
Calibration gas type:	Protocol 1 CO2 %
Calibration gas concentration:	2.50 %
Monitor uncorrected average:	0.24 %
Monitor drift corrected average:	**0.23 %**

Clock Time	Elapsed Time	Monitor #1 Stack Oxygen %	Monitor #2 Stack CO2 %
09 : 23	0		
09 : 24	1	20.57	0.26
09 : 25	2	20.56	0.23
09 : 26	3	20.53	0.16
09 : 27	4	20.54	0.26
09 : 28	5	20.56	0.22
09 : 29	6	20.57	0.25
09 : 30	7	20.55	0.24
09 : 31	8	20.61	0.25
09 : 32	9	20.60	0.21
09 : 33	10	20.53	0.21
09 : 34	11	20.59	0.23
09 : 35	12	20.64	0.28
09 : 36	13	20.59	0.23
09 : 37	14	20.58	0.26
09 : 38	15	20.51	0.20
09 : 39	16	20.58	0.26
09 : 40	17	20.59	0.25
09 : 41	18	20.61	0.24
09 : 42	19	20.54	0.21
09 : 43	20	20.60	0.23
09 : 44	21	20.53	0.22
09 : 45	22	20.63	0.26
09 : 46	23	20.60	0.22
09 : 47	24	20.59	0.28
09 : 48	25	20.54	0.18
09 : 49	26	20.58	0.27
09 : 50	27	20.65	0.33
09 : 51	28	20.60	0.24
09 : 52	29	20.60	0.27
09 : 53	30	20.55	0.20
	AVERAGE:	**20.58**	**0.24**

Reference Method Monitor Data
One-Minute Averages

Company: Medline Industries
Location: Waukegan, Illinois
Source: ETO Abatement System Common Stack
Test Date: 03/05/20
Run #: 2
Test Time: 1018-1048

Reference Method Monitor #1:	
Analyzer Type:	**Stack Oxygen**
Analyzer Scale:	21.00 %
Pre-test calibration span value:	20.92 %
Post-test calibration span value	20.85 %
Pre-test calibration zero value:	0.03 %
Post-test calibration zero value:	0.01 %
Calibration gas type:	Protocol 1 Oxygen %
Calibration gas concentration:	21.00 %
Monitor uncorrected average:	20.54 %
Monitor drift corrected average:	**20.66 %**

Reference Method Monitor #2:	
Analyzer Type:	**Stack CO2**
Analyzer Scale:	5.00 %
Pre-test calibration span value:	2.52 %
Post-test calibration span value	2.49 %
Pre-test calibration zero value:	0.02 %
Post-test calibration zero value:	-0.02 %
Calibration gas type:	Protocol 1 CO2 %
Calibration gas concentration:	2.50 %
Monitor uncorrected average:	0.22 %
Monitor drift corrected average:	**0.22 %**

Clock Time	Elapsed Time	Monitor #1 Stack Oxygen %	Monitor #2 Stack CO2 %
10 : 18	0		
10 : 19	1	20.50	0.20
10 : 20	2	20.53	0.23
10 : 21	3	20.43	0.10
10 : 22	4	20.51	0.18
10 : 23	5	20.47	0.17
10 : 24	6	20.58	0.28
10 : 25	7	20.53	0.26
10 : 26	8	20.53	0.25
10 : 27	9	20.57	0.23
10 : 28	10	20.58	0.20
10 : 29	11	20.57	0.24
10 : 30	12	20.57	0.23
10 : 31	13	20.59	0.23
10 : 32	14	20.52	0.18
10 : 33	15	20.58	0.23
10 : 34	16	20.53	0.26
10 : 35	17	20.58	0.22
10 : 36	18	20.50	0.17
10 : 37	19	20.53	0.20
10 : 38	20	20.55	0.23
10 : 39	21	20.55	0.24
10 : 40	22	20.55	0.21
10 : 41	23	20.57	0.22
10 : 42	24	20.56	0.22
10 : 43	25	20.49	0.17
10 : 44	26	20.57	0.23
10 : 45	27	20.55	0.20
10 : 46	28	20.58	0.25
10 : 47	29	20.54	0.26
10 : 48	30	20.50	0.19
	AVERAGE:	**20.54**	**0.22**

Reference Method Monitor Data
One-Minute Averages

Company: Medline Industries
Location: Waukegan, Illinois
Source: ETO Abatement System Common Stack
Test Date: 03/05/20
Run #: 3
Test Time: 1130-1200

Reference Method Monitor #1:	
Analyzer Type:	**Stack Oxygen**
Analyzer Scale:	21.00 %
Pre-test calibration span value:	20.85 %
Post-test calibration span value	20.88 %
Pre-test calibration zero value:	0.01 %
Post-test calibration zero value:	0.03 %
Calibration gas type:	Protocol 1 Oxygen %
Calibration gas concentration:	21.00 %
Monitor uncorrected average:	20.53 %
Monitor drift corrected average:	**20.66 %**

Reference Method Monitor #2:	
Analyzer Type:	**Stack CO2**
Analyzer Scale:	5.00 %
Pre-test calibration span value:	2.49 %
Post-test calibration span value	2.49 %
Pre-test calibration zero value:	-0.02 %
Post-test calibration zero value:	-0.04 %
Calibration gas type:	Protocol 1 CO2 %
Calibration gas concentration:	2.50 %
Monitor uncorrected average:	0.21 %
Monitor drift corrected average:	**0.24 %**

Clock Time	Elapsed Time	Monitor #1 Stack Oxygen %	Monitor #2 Stack CO2 %
11 : 30	0		
11 : 31	1	20.58	0.25
11 : 32	2	20.52	0.16
11 : 33	3	20.54	0.21
11 : 34	4	20.56	0.28
11 : 35	5	20.49	0.19
11 : 36	6	20.50	0.18
11 : 37	7	20.56	0.18
11 : 38	8	20.52	0.22
11 : 39	9	20.50	0.20
11 : 40	10	20.50	0.18
11 : 41	11	20.54	0.22
11 : 42	12	20.51	0.20
11 : 43	13	20.54	0.23
11 : 44	14	20.56	0.21
11 : 45	15	20.49	0.17
11 : 46	16	20.52	0.25
11 : 47	17	20.57	0.22
11 : 48	18	20.50	0.20
11 : 49	19	20.58	0.25
11 : 50	20	20.60	0.27
11 : 51	21	20.54	0.21
11 : 52	22	20.52	0.22
11 : 53	23	20.52	0.20
11 : 54	24	20.56	0.25
11 : 55	25	20.52	0.24
11 : 56	26	20.48	0.20
11 : 57	27	20.50	0.19
11 : 58	28	20.50	0.22
11 : 59	29	20.50	0.18
12 : 0	30	20.51	0.20
	AVERAGE:	**20.53**	**0.21**

Reference Method Monitor Data
One-Minute Averages

Company: Medline Industries
Location: Waukegan, Illinois
Source: ETO Abatement System Common Stack
Test Date: 03/05/20
Run #: 4
Test Time: 1230-1300

Reference Method Monitor #1:	
Analyzer Type:	**Stack Oxygen**
Analyzer Scale:	21.00 %
Pre-test calibration span value:	20.88 %
Post-test calibration span value	20.95 %
Pre-test calibration zero value:	0.03 %
Post-test calibration zero value:	0.04 %
Calibration gas type:	Protocol 1 Oxygen %
Calibration gas concentration:	21.00 %
Monitor uncorrected average:	20.48 %
Monitor drift corrected average:	**20.56 %**

Reference Method Monitor #2:	
Analyzer Type:	**Stack CO2**
Analyzer Scale:	5.00 %
Pre-test calibration span value:	2.49 %
Post-test calibration span value	2.54 %
Pre-test calibration zero value:	-0.04 %
Post-test calibration zero value:	-0.01 %
Calibration gas type:	Protocol 1 CO2 %
Calibration gas concentration:	2.50 %
Monitor uncorrected average:	0.21 %
Monitor drift corrected average:	**0.24 %**

Clock Time	Elapsed Time	Monitor #1 Stack Oxygen %	Monitor #2 Stack CO2 %
12 : 30	0		
12 : 31	1	20.52	0.23
12 : 32	2	20.50	0.21
12 : 33	3	20.54	0.23
12 : 34	4	20.49	0.18
12 : 35	5	20.52	0.22
12 : 36	6	20.51	0.19
12 : 37	7	20.50	0.22
12 : 38	8	20.49	0.21
12 : 39	9	20.55	0.25
12 : 40	10	20.48	0.19
12 : 41	11	20.47	0.22
12 : 42	12	20.53	0.21
12 : 43	13	20.47	0.20
12 : 44	14	20.50	0.24
12 : 45	15	20.46	0.21
12 : 46	16	20.41	0.19
12 : 47	17	20.48	0.22
12 : 48	18	20.49	0.24
12 : 49	19	20.45	0.19
12 : 50	20	20.49	0.21
12 : 51	21	20.43	0.22
12 : 52	22	20.49	0.23
12 : 53	23	20.47	0.23
12 : 54	24	20.43	0.18
12 : 55	25	20.49	0.23
12 : 56	26	20.45	0.21
12 : 57	27	20.46	0.19
12 : 58	28	20.51	0.25
12 : 59	29	20.43	0.17
13 : 0	30	20.44	0.21
	AVERAGE:	**20.48**	**0.21**

Reference Method Monitor Data
One-Minute Averages

Company: Medline Industries
Location: Waukegan, Illinois
Source: ETO Abatement System Common Stack
Test Date: 03/05/20
Run #: 5
Test Time: 1325-1355

Reference Method Monitor #1:	
Analyzer Type:	**Stack Oxygen**
Analyzer Scale:	21.00 %
Pre-test calibration span value:	20.95 %
Post-test calibration span value	20.85 %
Pre-test calibration zero value:	0.04 %
Post-test calibration zero value:	0.00 %
Calibration gas type:	Protocol 1 Oxygen %
Calibration gas concentration:	21.00 %
Monitor uncorrected average:	20.49 %
Monitor drift corrected average:	**20.59 %**

Reference Method Monitor #2:	
Analyzer Type:	**Stack CO2**
Analyzer Scale:	5.00 %
Pre-test calibration span value:	2.54 %
Post-test calibration span value	2.53 %
Pre-test calibration zero value:	-0.01 %
Post-test calibration zero value:	-0.08 %
Calibration gas type:	Protocol 1 CO2 %
Calibration gas concentration:	2.50 %
Monitor uncorrected average:	0.21 %
Monitor drift corrected average:	**0.25 %**

Clock Time	Elapsed Time	Monitor #1 Stack Oxygen %	Monitor #2 Stack CO2 %
13 : 25	0		
13 : 26	1	20.55	0.21
13 : 27	2	20.48	0.19
13 : 28	3	20.46	0.17
13 : 29	4	20.53	0.26
13 : 30	5	20.47	0.22
13 : 31	6	20.52	0.20
13 : 32	7	20.52	0.24
13 : 33	8	20.49	0.27
13 : 34	9	20.48	0.17
13 : 35	10	20.47	0.18
13 : 36	11	20.46	0.17
13 : 37	12	20.44	0.18
13 : 38	13	20.46	0.22
13 : 39	14	20.49	0.17
13 : 40	15	20.49	0.21
13 : 41	16	20.48	0.24
13 : 42	17	20.49	0.18
13 : 43	18	20.48	0.21
13 : 44	19	20.48	0.21
13 : 45	20	20.43	0.19
13 : 46	21	20.47	0.20
13 : 47	22	20.50	0.23
13 : 48	23	20.45	0.21
13 : 49	24	20.47	0.23
13 : 50	25	20.51	0.22
13 : 51	26	20.52	0.23
13 : 52	27	20.51	0.21
13 : 53	28	20.54	0.31
13 : 54	29	20.54	0.25
13 : 55	30	20.54	0.23
	AVERAGE:	**20.49**	**0.21**

Reference Method Monitor Data
One-Minute Averages

Company: Medline Industries
Location: Waukegan, Illinois
Source: ETO Abatement System Common Stack
Test Date: 03/05/20
Run #: 6
Test Time: 1420-1450

Reference Method Monitor #1:	
Analyzer Type:	**Stack Oxygen**
Analyzer Scale:	21.00 %
Pre-test calibration span value:	20.85 %
Post-test calibration span value	20.89 %
Pre-test calibration zero value:	0.00 %
Post-test calibration zero value:	-0.02 %
Calibration gas type:	Protocol 1 Oxygen %
Calibration gas concentration:	21.00 %
Monitor uncorrected average:	20.50 %
Monitor drift corrected average:	**20.63 %**

Reference Method Monitor #2:	
Analyzer Type:	**Stack CO2**
Analyzer Scale:	5.00 %
Pre-test calibration span value:	2.53 %
Post-test calibration span value	2.55 %
Pre-test calibration zero value:	-0.08 %
Post-test calibration zero value:	-0.11 %
Calibration gas type:	Protocol 1 CO2 %
Calibration gas concentration:	2.50 %
Monitor uncorrected average:	0.22 %
Monitor drift corrected average:	**0.30 %**

Clock Time	Elapsed Time	Monitor #1 Stack Oxygen %	Monitor #2 Stack CO2 %
14 : 20	0		
14 : 21	1	20.49	0.22
14 : 22	2	20.53	0.23
14 : 23	3	20.56	0.24
14 : 24	4	20.51	0.21
14 : 25	5	20.48	0.20
14 : 26	6	20.51	0.25
14 : 27	7	20.56	0.23
14 : 28	8	20.49	0.21
14 : 29	9	20.57	0.26
14 : 30	10	20.47	0.23
14 : 31	11	20.54	0.23
14 : 32	12	20.50	0.21
14 : 33	13	20.49	0.21
14 : 34	14	20.49	0.25
14 : 35	15	20.48	0.21
14 : 36	16	20.49	0.22
14 : 37	17	20.52	0.25
14 : 38	18	20.46	0.18
14 : 39	19	20.49	0.19
14 : 40	20	20.43	0.19
14 : 41	21	20.49	0.22
14 : 42	22	20.55	0.23
14 : 43	23	20.48	0.20
14 : 44	24	20.50	0.26
14 : 45	25	20.47	0.26
14 : 46	26	20.50	0.25
14 : 47	27	20.49	0.23
14 : 48	28	20.47	0.19
14 : 49	29	20.44	0.17
14 : 50	30	20.42	0.15
	AVERAGE:	**20.50**	**0.22**

Reference Method Monitor Data
One-Minute Averages

Company: Medline Industries
Location: Waukegan, Illinois
Source: ETO Abatement System Common Stack
Test Date: 03/05/20
Run #: 7
Test Time: 1512-1542

Reference Method Monitor #1:	
Analyzer Type:	**Stack Oxygen**
Analyzer Scale:	21.00 %
Pre-test calibration span value:	20.89 %
Post-test calibration span value	20.93 %
Pre-test calibration zero value:	-0.02 %
Post-test calibration zero value:	0.04 %
Calibration gas type:	Protocol 1 Oxygen %
Calibration gas concentration:	21.00 %
Monitor uncorrected average:	20.52 %
Monitor drift corrected average:	**20.60 %**

Reference Method Monitor #2:	
Analyzer Type:	**Stack CO2**
Analyzer Scale:	5.00 %
Pre-test calibration span value:	2.55 %
Post-test calibration span value	2.55 %
Pre-test calibration zero value:	-0.11 %
Post-test calibration zero value:	-0.02 %
Calibration gas type:	Protocol 1 CO2 %
Calibration gas concentration:	2.50 %
Monitor uncorrected average:	0.22 %
Monitor drift corrected average:	**0.27 %**

Clock Time	Elapsed Time	Monitor #1 Stack Oxygen %	Monitor #2 Stack CO2 %
15 : 12	0		
15 : 13	1	20.51	0.26
15 : 14	2	20.48	0.22
15 : 15	3	20.51	0.23
15 : 16	4	20.51	0.24
15 : 17	5	20.53	0.25
15 : 18	6	20.53	0.23
15 : 19	7	20.52	0.24
15 : 20	8	20.48	0.24
15 : 21	9	20.51	0.22
15 : 22	10	20.49	0.22
15 : 23	11	20.45	0.22
15 : 24	12	20.49	0.22
15 : 25	13	20.50	0.22
15 : 26	14	20.50	0.20
15 : 27	15	20.50	0.21
15 : 28	16	20.48	0.20
15 : 29	17	20.52	0.22
15 : 30	18	20.47	0.19
15 : 31	19	20.54	0.21
15 : 32	20	20.53	0.20
15 : 33	21	20.51	0.25
15 : 34	22	20.54	0.26
15 : 35	23	20.54	0.21
15 : 36	24	20.56	0.24
15 : 37	25	20.53	0.20
15 : 38	26	20.56	0.24
15 : 39	27	20.53	0.19
15 : 40	28	20.54	0.24
15 : 41	29	20.54	0.21
15 : 42	30	20.55	0.17
	AVERAGE:	**20.52**	**0.22**

Reference Method Monitor Data
One-Minute Averages

Company: Medline Industries
Location: Waukegan, Illinois
Source: ETO Abatement System Common Stack
Test Date: 03/05/20
Run #: 8
Test Time: 1609-1639

Reference Method Monitor #1:	
Analyzer Type:	**Stack Oxygen**
Analyzer Scale:	21.00 %
Pre-test calibration span value:	20.93 %
Post-test calibration span value	20.97 %
Pre-test calibration zero value:	0.04 %
Post-test calibration zero value:	0.04 %
Calibration gas type:	Protocol 1 Oxygen %
Calibration gas concentration:	21.00 %
Monitor uncorrected average:	20.54 %
Monitor drift corrected average:	**20.59 %**

Reference Method Monitor #2:	
Analyzer Type:	**Stack CO2**
Analyzer Scale:	5.00 %
Pre-test calibration span value:	2.55 %
Post-test calibration span value	2.56 %
Pre-test calibration zero value:	-0.02 %
Post-test calibration zero value:	-0.03 %
Calibration gas type:	Protocol 1 CO2 %
Calibration gas concentration:	2.50 %
Monitor uncorrected average:	0.21 %
Monitor drift corrected average:	**0.23 %**

Clock Time	Elapsed Time	Monitor #1 Stack Oxygen %	Monitor #2 Stack CO2 %
16 : 09	0		
16 : 10	1	20.57	0.22
16 : 11	2	20.56	0.22
16 : 12	3	20.51	0.18
16 : 13	4	20.50	0.22
16 : 14	5	20.57	0.23
16 : 15	6	20.55	0.21
16 : 16	7	20.48	0.22
16 : 17	8	20.54	0.23
16 : 18	9	20.50	0.16
16 : 19	10	20.52	0.20
16 : 20	11	20.57	0.24
16 : 21	12	20.52	0.20
16 : 22	13	20.55	0.21
16 : 23	14	20.53	0.23
16 : 24	15	20.57	0.22
16 : 25	16	20.58	0.24
16 : 26	17	20.53	0.21
16 : 27	18	20.52	0.19
16 : 28	19	20.54	0.21
16 : 29	20	20.52	0.20
16 : 30	21	20.54	0.22
16 : 31	22	20.54	0.22
16 : 32	23	20.55	0.17
16 : 33	24	20.57	0.24
16 : 34	25	20.56	0.22
16 : 35	26	20.54	0.20
16 : 36	27	20.55	0.25
16 : 37	28	20.51	0.21
16 : 38	29	20.57	0.23
16 : 39	30	20.55	0.22
	AVERAGE:	**20.54**	**0.21**

Reference Method Monitor Data
One-Minute Averages

Company: Medline Industries
Location: Waukegan, Illinois
Source: ETO Abatement System Common Stack
Test Date: 03/05/20
Run #: 9
Test Time: 1708-1738

Reference Method Monitor #1:	
Analyzer Type:	**Stack Oxygen**
Analyzer Scale:	21.00 %
Pre-test calibration span value:	20.97 %
Post-test calibration span value	20.87 %
Pre-test calibration zero value:	0.04 %
Post-test calibration zero value:	0.06 %
Calibration gas type:	Protocol 1 Oxygen %
Calibration gas concentration:	21.00 %
Monitor uncorrected average:	20.53 %
Monitor drift corrected average:	**20.61 %**

Reference Method Monitor #2:	
Analyzer Type:	**Stack CO2**
Analyzer Scale:	5.00 %
Pre-test calibration span value:	2.56 %
Post-test calibration span value	2.51 %
Pre-test calibration zero value:	-0.03 %
Post-test calibration zero value:	-0.03 %
Calibration gas type:	Protocol 1 CO2 %
Calibration gas concentration:	2.50 %
Monitor uncorrected average:	0.21 %
Monitor drift corrected average:	**0.23 %**

Clock Time	Elapsed Time	Monitor #1 Stack Oxygen %	Monitor #2 Stack CO2 %
17 : 08	0		
17 : 9	1	20.52	0.19
17 : 10	2	20.56	0.22
17 : 11	3	20.55	0.22
17 : 12	4	20.50	0.19
17 : 13	5	20.58	0.25
17 : 14	6	20.54	0.22
17 : 15	7	20.59	0.24
17 : 16	8	20.52	0.20
17 : 17	9	20.54	0.25
17 : 18	10	20.57	0.22
17 : 19	11	20.59	0.24
17 : 20	12	20.61	0.24
17 : 21	13	20.53	0.16
17 : 22	14	20.54	0.23
17 : 23	15	20.49	0.13
17 : 24	16	20.52	0.17
17 : 25	17	20.53	0.18
17 : 26	18	20.56	0.25
17 : 27	19	20.48	0.15
17 : 28	20	20.58	0.23
17 : 29	21	20.50	0.17
17 : 30	22	20.57	0.25
17 : 31	23	20.52	0.19
17 : 32	24	20.47	0.20
17 : 33	25	20.48	0.20
17 : 34	26	20.48	0.21
17 : 35	27	20.46	0.19
17 : 36	28	20.47	0.19
17 : 37	29	20.50	0.22
17 : 38	30	20.50	0.21
	AVERAGE:	**20.53**	**0.21**

Reference Method Monitoring Calibration Error Data Sheet
Analyzer Response

Plant Name:	Medline Industries
Sampling Location:	Waukegan, Illinois
Date:	ETO Abatement System Common Stack

ANALYZER SPAN VALUE (% or ppm)	
Stack Oxygen	21.00
Stack CO2	5.00

		MONITOR SERIAL NUMBER	CYLINDER NUMBER	CYLINDER VALUE (% or ppm)	ANALYZER CALIBRATION RESPONSE	DIFFERENCE (% OF GAS/SPAN)
Stack Oxygen	Zero	1440D1/4214	cc103106	0.0	0.01	0.05
Stack Oxygen	Low					
Stack Oxygen	Mid		EB00333448	10.0	10.09	0.41
Stack Oxygen	High		EB00333448	21.0	21.04	0.19
Stack CO2	Zero	1440D1/4214	cc103106	0.0	-0.01	-0.21
Stack CO2	Low					
Stack CO2	Mid		EB00333448	2.5	2.51	0.23
Stack CO2	High		EB00333448	5.0	5.00	0.02

FTIR Gases: **Starboost FTIR (Common Stack):**

Starboost CTS Methane 100.3 ppm: Airgas CC-420194

Starboost Cal Gas 2.286 ppm Ethylene Oxide/513.9 Ethane: Airgas CC717111

REFERENCE METHOD MONITOR CALIBRATION DATA
System Bias and Drift
Page #1

Company: Medline Industries
Location: Waukegan, Illinois
Source: ETO Abatement System Common Stack

Run:	1			2			3		
Date:	3/5/2020			3/5/2020			3/5/2020		
Time:	0923-0953			1018-1048			1130-1200		
Stack Oxygen	**Pretest**	**Posttest**	**Drift**	**Pretest**	**Posttest**	**Drift**	**Pretest**	**Posttest**	**Drift**
Cal Error Response to Zero	0.01	0.01		0.01	0.01		0.01	0.01	
System Response to Zero	0.050	0.032		0.032	0.009		0.009	0.028	
Zero Bias, % of Span	0.19	0.10	-0.09	0.10	-0.01	-0.11	-0.01	0.08	0.09
Mid-Range Calibration Conc.	21.04	21.04		21.04	21.04		21.04	21.04	
System Response to Cal	20.961	20.915		20.915	20.850		20.850	20.885	
Cal Bias, % of Span	-0.37	-0.59	-0.22	-0.59	-0.90	-0.31	-0.90	-0.74	0.17
Stack CO2	**Pretest**	**Posttest**	**Drift**	**Pretest**	**Posttest**	**Drift**	**Pretest**	**Posttest**	**Drift**
Cal Error Response to Zero	-0.01	-0.01		-0.01	-0.01		-0.01	-0.01	
System Response to Zero	0.005	0.020		0.020	-0.021		-0.021	-0.044	
Zero Bias, % of Span	0.31	0.61	0.30	0.61	-0.21	-0.82	-0.21	-0.66	-0.45
Mid-Range Calibration Conc.	2.51	2.51		2.51	2.51		2.51	2.51	
System Response to Cal	2.508	2.518		2.518	2.486		2.486	2.488	
Cal Bias, % of Span	-0.07	0.13	0.20	0.13	-0.52	-0.65	-0.52	-0.47	0.05

REFERENCE METHOD MONITOR CALIBRATION DATA
System Bias and Drift
Page #2

Company: Medline Industries
Location: Waukegan, Illinois
Source: ETO Abatement System Common Stack

Run:	4			5			6		
Date:	3/5/2020			3/5/2020			3/5/2020		
Time:	1230-1300			1325-1355			1420-1450		
Stack Oxygen	**Pretest**	**Posttest**	**Drift**	**Pretest**	**Posttest**	**Drift**	**Pretest**	**Posttest**	**Drift**
Cal Error Response to Zero	0.01	0.01		0.01	0.01		0.01	0.01	
System Response to Zero	0.028	0.038		0.038	0.005		0.005	-0.021	
Zero Bias, % of Span	0.08	0.13	0.05	0.13	-0.03	-0.16	-0.03	-0.15	-0.12
Mid-Range Calibration Conc.	21.04	21.04		21.04	21.04		21.04	21.04	
System Response to Cal	20.885	20.947		20.947	20.847		20.847	20.890	
Cal Bias, % of Span	-0.74	-0.44	0.29	-0.44	-0.92	-0.48	-0.92	-0.71	0.21
Stack CO2	**Pretest**	**Posttest**	**Drift**	**Pretest**	**Posttest**	**Drift**	**Pretest**	**Posttest**	**Drift**
Cal Error Response to Zero	-0.01	-0.01		-0.01	-0.01		-0.01	-0.01	
System Response to Zero	-0.044	-0.009		-0.009	-0.082		-0.082	-0.105	
Zero Bias, % of Span	-0.66	0.03	0.69	0.03	-1.43	-1.46	-1.43	-1.89	-0.47
Mid-Range Calibration Conc.	2.51	2.51		2.51	2.51		2.51	2.51	
System Response to Cal	2.488	2.539		2.539	2.530		2.530	2.554	
Cal Bias, % of Span	-0.47	0.56	1.03	0.56	0.36	-0.19	0.36	0.86	0.49

REFERENCE METHOD MONITOR CALIBRATION DATA
System Bias and Drift
Page #3

Company: Medline Industries
Location: Waukegan, Illinois
Source: ETO Abatement System Common Stack

Run:	7			8			9		
Date:	3/5/2020			3/5/2020			3/5/2020		
Time:	1512-1542			1609-1639			1708-1738		
Stack Oxygen	**Pretest**	**Posttest**	**Drift**	**Pretest**	**Posttest**	**Drift**	**Pretest**	**Posttest**	**Drift**
Cal Error Response to Zero	0.01	0.01		0.01	0.01		0.01	0.01	
System Response to Zero	-0.021	0.043		0.043	0.038		0.038	0.057	
Zero Bias, % of Span	-0.15	0.16	0.31	0.16	0.13	-0.02	0.13	0.22	0.09
Mid-Range Calibration Conc.	21.04	21.04		21.04	21.04		21.04	21.04	
System Response to Cal	20.890	20.929		20.929	20.973		20.973	20.869	
Cal Bias, % of Span	-0.71	-0.52	0.19	-0.52	-0.32	0.21	-0.32	-0.81	-0.49
Stack CO2	**Pretest**	**Posttest**	**Drift**	**Pretest**	**Posttest**	**Drift**	**Pretest**	**Posttest**	**Drift**
Cal Error Response to Zero	-0.01	-0.01		-0.01	-0.01		-0.01	-0.01	
System Response to Zero	-0.105	-0.023		-0.023	-0.027		-0.027	-0.030	
Zero Bias, % of Span	-1.89	-0.24	1.65	-0.24	-0.33	-0.09	-0.33	-0.39	-0.06
Mid-Range Calibration Conc.	2.51	2.51		2.51	2.51		2.51	2.51	
System Response to Cal	2.554	2.549		2.549	2.564		2.564	2.512	
Cal Bias, % of Span	0.86	0.74	-0.11	0.74	1.05	0.31	1.05	0.01	-1.05

RESPONSE TIME , CONVERSION EFFICIENCY AND STRATIFICATION CHECK

Company: Medline Industries
Location Waukegan, Illinois
Source: ETO Abatement System Common Stack
Test Date: 03/05/20

RESPONSE TIME CHECK

Component	Upscale Response (seconds)	Downscale Response (seconds)
O_2	60	60
CO_2	75	60

System Response Time = **75** **seconds**

STRATIFICATION CHECK (Run #1-100% Load Condition)

Port/Point		Oxygen	% dev	CO2	% dev
1-1		20.56	0.07	0.23	4.10
1-2		20.58	0.02	0.24	0.08
1-3		20.59	0.05	0.25	4.18
	Averege:	**20.577**		**0.24**	
			0.069		**4.175**
		<10% deviation?:	**YES**	**<10% deviation?:**	**YES**
		<5% deviation?:	**YES**	**<5% deviation?:**	**YES**

Stratification Criteria Per Method 7E:
12 sample points: >10% or ± 1.0 ppm (pollutant) or +/- 0.5% (diluent)
3 sample points: ≤ 10% or ± 1.0 ppm (pollutant) or +/- 0.5% (diluent)
1 sample point: ≤ 5% or ± 0.5 ppm (pollutant) or +/- 0.3% (diluent)

Stratification Criteria Per Part 75:
3 sample points: ≤ 10% or ± 5 ppm (pollutant) or +/- 0.5% (diluent)
1 sample point: ≤ 5% or ± 3 ppm (pollutant) or +/- 0.3% (diluent)

Stratification Criteria Per Performance Specifications:
3 sample points located at 16.7%, 50.0%, and 83.3%. Additional sample/traverse points are optional. Single point sampling not allowed.

RM FIELD DATA

Client Medline
Location Waukegan, IL
Source EO Control System
Date 3/5/2020

Date/Time	Common Stk Oxygen (% v db)	Common Stk CO2 (% v db)	Comments
3/5/2020 8:23:33	0.04	0.01	
3/5/2020 8:23:48	0.00	-0.05	
3/5/2020 8:24:03	-0.08	-0.05	
3/5/2020 8:24:18	0.03	0.11	
3/5/2020 8:24:33	0.00	-0.02	
3/5/2020 8:24:48	0.04	0.00	Instrument Calibration Error Test:
3/5/2020 8:25:03	-0.02	-0.03	zero nitrogen:
3/5/2020 8:25:18	0.04	0.01	0.01 % v db Oxygen
3/5/2020 8:25:33	-0.02	-0.03	-0.01 % v db CO2
3/5/2020 8:25:48	0.04	0.00	
3/5/2020 8:26:03	-0.01	-0.03	
3/5/2020 8:26:18	21.88	19.13	
3/5/2020 8:26:33	18.93	12.25	
3/5/2020 8:26:48	17.01	7.76	
3/5/2020 8:27:03	17.96	10.66	
3/5/2020 8:27:18	19.92	17.18	
3/5/2020 8:27:33	20.68	19.64	
3/5/2020 8:27:48	20.86	20.56	Instrument Calibration Error Test:
3/5/2020 8:28:03	21.03	21.03	21.0% v db Oxygen:
3/5/2020 8:28:18	21.10	21.18	21.04 % v db Oxygen
3/5/2020 8:28:33	21.04	21.21	
3/5/2020 8:28:48	20.99	21.28	
3/5/2020 8:29:03	21.03	21.32	
3/5/2020 8:29:18	21.09	21.36	Instrument Calibration Error Test:
3/5/2020 8:29:33	10.05	10.08	10.0% v db Oxygen:
3/5/2020 8:29:48	10.12	10.13	10.09 % v db Oxygen
3/5/2020 8:30:03	10.06	10.08	
3/5/2020 8:30:18	10.12	10.15	
3/5/2020 8:30:33	10.06	10.07	
3/5/2020 8:30:48	10.12	10.12	
3/5/2020 8:31:03	9.99	10.01	
3/5/2020 8:31:18	9.60	9.58	Instrument Calibration Error Test:
3/5/2020 8:31:33	5.17	5.03	5.00% v db CO2:
3/5/2020 8:31:48	5.07	5.00	5.00 % v db CO2
3/5/2020 8:32:03	4.97	4.86	
3/5/2020 8:32:18	5.06	5.11	
3/5/2020 8:32:33	5.00	4.94	
3/5/2020 8:32:48	4.91	4.87	
3/5/2020 8:33:03	2.55	2.55	Instrument Calibration Error Test:
3/5/2020 8:33:18	2.50	2.50	2.50% v db CO2:
3/5/2020 8:33:33	2.54	2.53	2.51 % v db CO2
3/5/2020 8:33:48	2.50	2.49	
3/5/2020 8:34:03	2.54	2.52	
3/5/2020 8:34:18	2.48	2.49	
3/5/2020 8:34:33	2.86	2.54	
3/5/2020 8:34:48	20.58	0.26	
3/5/2020 8:35:03	20.67	0.30	
3/5/2020 8:35:18	20.61	0.23	
3/5/2020 8:35:33	20.47	0.13	
3/5/2020 8:35:48	20.62	0.28	
3/5/2020 8:36:03	20.55	0.22	
3/5/2020 8:36:18	20.51	0.23	
3/5/2020 8:36:33	18.33	0.52	
3/5/2020 8:36:48	3.59	2.23	System Bias Test:
3/5/2020 8:37:03	2.67	2.49	2.50% v db CO2:
3/5/2020 8:37:18	2.58	2.50	2.51 % v db CO2
3/5/2020 8:37:33	2.75	2.65	
3/5/2020 8:37:48	2.58	2.39	
3/5/2020 8:38:03	2.61	2.53	
3/5/2020 8:38:18	2.57	2.50	
3/5/2020 8:38:33	2.60	2.54	
3/5/2020 8:38:48	2.51	2.48	
3/5/2020 8:39:03	0.23	0.28	
3/5/2020 8:39:18	0.09	0.06	
3/5/2020 8:39:33	0.00	-0.01	
3/5/2020 8:39:48	0.09	0.03	System Bias Test:
3/5/2020 8:40:03	0.05	0.01	zero nitrogen:
3/5/2020 8:40:18	0.03	-0.01	0.05 % v db Oxygen
3/5/2020 8:40:33	0.07	0.02	0.00 % v db CO2
3/5/2020 8:40:48	0.05	0.00	
3/5/2020 8:41:03	0.02	-0.02	
3/5/2020 8:41:18	0.06	0.01	
3/5/2020 8:41:33	0.00	-0.05	
3/5/2020 8:41:48	15.25	0.54	
3/5/2020 8:42:03	21.43	20.45	
3/5/2020 8:42:18	22.26	22.30	
3/5/2020 8:42:33	21.67	21.93	System Bias Test:
3/5/2020 8:42:48	21.03	21.38	21.0% v db Oxygen:
3/5/2020 8:43:03	20.90	21.31	20.96 % v db Oxygen
3/5/2020 8:43:18	20.87	21.30	
3/5/2020 8:43:33	21.04	21.37	
3/5/2020 8:43:48	20.83	21.24	

15 sec avgs

RM FIELD DATA

Client Madline
Location Waukegan, IL
Source EO Control System
Date 3/5/2020

Date/Time	Common Stk Oxygen (% v db)	Common Stk CO2 (% v db)	Comments
3/5/2020 8:44:03	21.07	21.49	
3/5/2020 8:44:18	20.92	21.31	
3/5/2020 8:44:33	21.01	20.51	
3/5/2020 8:44:48	20.62	2.47	
3/5/2020 8:45:03	20.53	0.49	
3/5/2020 8:45:18	20.59	0.43	
3/5/2020 8:45:33	20.59	0.36	
3/5/2020 8:45:48	20.59	0.52	
3/5/2020 8:46:03	20.59	0.27	
3/5/2020 8:46:18	20.56	0.28	
3/5/2020 8:46:33	20.48	0.26	
3/5/2020 8:46:48	20.64	0.33	
3/5/2020 8:47:03	20.61	0.30	
3/5/2020 8:47:18	20.58	0.24	
3/5/2020 8:47:33	20.44	0.14	
3/5/2020 8:47:48	20.61	0.43	
3/5/2020 8:48:03	20.59	0.24	
3/5/2020 8:48:18	20.63	0.28	
3/5/2020 8:48:33	20.58	0.24	
3/5/2020 8:48:48	20.62	0.27	
3/5/2020 8:49:03	20.56	0.24	
3/5/2020 8:49:18	20.51	0.23	
3/5/2020 8:49:33	20.62	0.34	
3/5/2020 8:49:48	20.58	0.24	
3/5/2020 8:50:03	20.65	0.29	
3/5/2020 8:50:18	20.55	0.21	
3/5/2020 8:50:33	20.63	0.28	
3/5/2020 8:50:48	20.57	0.24	
3/5/2020 8:51:03	20.63	0.27	
3/5/2020 8:51:18	20.55	0.22	
3/5/2020 8:51:33	20.58	0.30	
3/5/2020 8:51:48	20.73	0.34	
3/5/2020 8:52:03	20.48	0.14	
3/5/2020 8:52:18	20.72	0.34	
3/5/2020 8:52:33	20.58	0.22	
3/5/2020 8:52:48	20.63	0.26	**acquisition paused**
3/5/2020 18:21:14	20.08	0.13	**acquisition resumed**
3/5/2020 18:21:29	20.48	0.26	
3/5/2020 9:18:02	20.48	0.12	
3/5/2020 9:18:17	20.60	0.41	
3/5/2020 9:18:32	20.57	0.06	
3/5/2020 9:18:47	20.71	0.33	
3/5/2020 9:19:02	20.58	0.28	
3/5/2020 9:19:17	20.55	0.22	
3/5/2020 9:19:32	20.61	0.26	
3/5/2020 9:19:47	20.58	0.05	
3/5/2020 9:20:02	20.61	0.26	
3/5/2020 9:20:17	20.58	0.21	
3/5/2020 9:20:32	20.66	0.27	
3/5/2020 9:20:47	20.60	0.25	
3/5/2020 9:21:02	20.71	0.34	
3/5/2020 9:21:17	20.55	0.21	
3/5/2020 9:21:32	20.47	0.17	
3/5/2020 9:21:47	20.60	0.26	
3/5/2020 9:22:02	20.62	0.36	
3/5/2020 9:22:17	20.63	0.24	
3/5/2020 9:22:32	20.57	0.22	
3/5/2020 9:22:47	20.60	0.26	**Begin RA Test Run #1**
3/5/2020 9:23:02	**20.57**	**0.19**	**Point #1**
3/5/2020 9:23:17	**20.74**	**0.37**	**Stratification Check**
3/5/2020 9:23:32	**20.39**	**0.11**	
3/5/2020 9:23:47	**20.60**	**0.95**	
3/5/2020 9:24:02	**20.56**	**0.16**	
3/5/2020 9:24:17	**20.59**	**0.27**	
3/5/2020 9:24:32	**20.45**	**0.12**	
3/5/2020 9:24:47	**20.64**	**0.36**	
3/5/2020 9:25:02	**20.56**	**0.07**	
3/5/2020 9:25:17	**20.59**	**0.25**	
3/5/2020 9:25:32	**20.45**	**0.12**	
3/5/2020 9:25:47	**20.52**	**0.21**	
3/5/2020 9:26:02	**20.59**	**0.34**	
3/5/2020 9:26:17	**20.44**	**0.10**	
3/5/2020 9:26:32	**20.57**	**0.19**	
3/5/2020 9:26:47	**20.59**	**0.41**	
3/5/2020 9:27:02	**20.62**	**0.26**	
3/5/2020 9:27:17	**20.40**	**0.11**	
3/5/2020 9:27:32	**20.54**	**0.22**	
3/5/2020 9:27:47	**20.69**	**0.29**	
3/5/2020 9:28:02	**20.59**	**0.25**	
3/5/2020 9:28:17	**20.46**	**0.21**	
3/5/2020 9:28:32	**20.54**	**0.22**	
3/5/2020 9:28:47	**20.69**	**0.33**	

15 sec avgs

RM FIELD DATA

Client Medline
Location Waukegan, IL
Source EO Control System
Date 3/5/2020

Date/Time	Common Stk Oxygen (% v db)	Common Stk CO2 (% v db)	Comments
3/5/2020 9:29:02	20.59	0.28	
3/5/2020 9:29:17	20.52	0.20	
3/5/2020 9:29:32	20.59	0.26	
3/5/2020 9:29:47	20.48	0.21	
3/5/2020 9:30:02	20.55	0.22	
3/5/2020 9:30:17	20.69	0.27	
3/5/2020 9:30:32	20.61	0.25	
3/5/2020 9:30:47	20.58	0.27	
3/5/2020 9:31:02	20.56	0.11	
3/5/2020 9:31:17	20.55	0.21	
3/5/2020 9:31:32	20.70	0.26	
3/5/2020 9:31:47	20.60	0.25	
3/5/2020 9:32:02	20.46	0.16	
3/5/2020 9:32:17	20.56	0.19	
3/5/2020 9:32:32	20.60	0.26	
3/5/2020 9:32:47	20.52	0.22	
3/5/2020 9:33:02	20.53	0.19	Point #2
3/5/2020 9:33:17	20.61	0.26	Stratification Check
3/5/2020 9:33:32	20.56	0.22	
3/5/2020 9:33:47	20.67	0.25	
3/5/2020 9:34:02	20.62	0.26	
3/5/2020 9:34:17	20.56	0.22	
3/5/2020 9:34:32	20.76	0.36	
3/5/2020 9:34:47	20.60	0.28	
3/5/2020 9:35:02	20.54	0.21	
3/5/2020 9:35:17	20.63	0.24	
3/5/2020 9:35:32	20.56	0.19	
3/5/2020 9:35:47	20.64	0.26	
3/5/2020 9:36:02	20.54	0.20	
3/5/2020 9:36:17	20.62	0.25	
3/5/2020 9:36:32	20.56	0.22	
3/5/2020 9:36:47	20.59	0.37	
3/5/2020 9:37:02	20.43	0.11	
3/5/2020 9:37:17	20.60	0.35	
3/5/2020 9:37:32	20.54	0.22	
3/5/2020 9:37:47	20.45	0.12	
3/5/2020 9:38:02	20.50	0.20	
3/5/2020 9:38:17	20.58	0.28	
3/5/2020 9:38:32	20.63	0.28	
3/5/2020 9:38:47	20.61	0.27	
3/5/2020 9:39:02	20.62	0.26	
3/5/2020 9:39:17	20.70	0.35	
3/5/2020 9:39:32	20.56	0.21	
3/5/2020 9:39:47	20.48	0.19	
3/5/2020 9:40:02	20.63	0.25	
3/5/2020 9:40:17	20.71	0.31	
3/5/2020 9:40:32	20.55	0.19	
3/5/2020 9:40:47	20.55	0.21	
3/5/2020 9:41:02	20.54	0.20	
3/5/2020 9:41:17	20.56	0.21	
3/5/2020 9:41:32	20.45	0.17	
3/5/2020 9:41:47	20.61	0.25	
3/5/2020 9:42:02	20.67	0.26	
3/5/2020 9:42:17	20.45	0.15	
3/5/2020 9:42:32	20.71	0.30	
3/5/2020 9:42:47	20.56	0.21	
3/5/2020 9:43:02	20.47	0.20	Point #3
3/5/2020 9:43:17	20.50	0.20	Stratification Check
3/5/2020 9:43:32	20.54	0.22	
3/5/2020 9:43:47	20.61	0.27	
3/5/2020 9:44:02	20.61	0.26	
3/5/2020 9:44:17	20.70	0.34	
3/5/2020 9:44:32	20.57	0.20	
3/5/2020 9:44:47	20.62	0.25	
3/5/2020 9:45:02	20.59	0.18	
3/5/2020 9:45:17	20.57	0.21	
3/5/2020 9:45:32	20.63	0.26	
3/5/2020 9:45:47	20.61	0.25	
3/5/2020 9:46:02	20.55	0.20	
3/5/2020 9:46:17	20.61	0.27	
3/5/2020 9:46:32	20.59	0.33	
3/5/2020 9:46:47	20.62	0.24	
3/5/2020 9:47:02	20.52	0.19	
3/5/2020 9:47:17	20.53	0.19	
3/5/2020 9:47:32	20.55	0.22	
3/5/2020 9:47:47	20.56	0.11	
3/5/2020 9:48:02	20.57	0.27	
3/5/2020 9:48:17	20.59	0.36	
3/5/2020 9:48:32	20.55	0.21	
3/5/2020 9:48:47	20.62	0.26	
3/5/2020 9:49:02	20.59	0.26	
3/5/2020 9:49:17	20.69	0.35	
3/5/2020 9:49:32	20.70	0.31	

15 sec avgs

RM FIELD DATA

Client Medline
Location Waukegan, IL
Source EO Control System
Date 3/5/2020

Date/Time	Common Stk Oxygen (% v db)	Common Stk CO2 (% v db)	Comments
3/5/2020 9:49:47	20.60	0.40	
3/5/2020 9:50:02	20.59	0.24	
3/5/2020 9:50:17	20.60	0.24	
3/5/2020 9:50:32	20.63	0.24	
3/5/2020 9:50:47	20.60	0.25	
3/5/2020 9:51:02	20.59	0.36	
3/5/2020 9:51:17	20.70	0.28	
3/5/2020 9:51:32	20.60	0.25	
3/5/2020 9:51:47	20.59	0.21	
3/5/2020 9:52:02	20.45	0.11	
3/5/2020 9:52:17	20.60	0.25	
3/5/2020 9:52:32	20.58	0.21	
3/5/2020 9:52:47	20.55	0.21	End RA Run #1
3/5/2020 9:53:02	20.58	0.27	
3/5/2020 9:53:17	20.62	0.26	
3/5/2020 9:53:32	20.59	0.27	
3/5/2020 9:53:47	20.45	0.12	
3/5/2020 9:54:02	20.55	0.13	
3/5/2020 9:54:17	20.55	0.11	
3/5/2020 9:54:32	20.63	0.26	
3/5/2020 9:54:47	20.69	0.36	
3/5/2020 9:55:02	20.55	0.20	
3/5/2020 9:55:17	20.58	0.26	
3/5/2020 9:55:32	20.60	0.24	
3/5/2020 9:55:47	20.69	0.36	
3/5/2020 9:56:02	8.16	1.73	
3/5/2020 9:56:17	0.57	0.13	
3/5/2020 9:56:32	0.22	0.03	
3/5/2020 9:56:47	0.22	0.06	
3/5/2020 9:57:02	0.16	0.02	
3/5/2020 9:57:17	0.07	-0.01	
3/5/2020 9:57:32	0.01	-0.03	
3/5/2020 9:57:47	0.03	-0.03	
3/5/2020 9:58:02	0.04	-0.02	
3/5/2020 9:58:17	-0.04	-0.04	
3/5/2020 9:58:32	0.18	0.06	Post-test Bias and Drift Check:
3/5/2020 9:58:47	-0.01	0.00	zero nitrogen:
3/5/2020 9:59:02	0.06	0.11	0.03 % v db Oxygen
3/5/2020 9:59:17	0.09	0.02	0.02 % v db CO2
3/5/2020 9:59:32	-0.01	-0.04	
3/5/2020 9:59:47	-0.01	-0.13	
3/5/2020 10:00:02	0.03	0.04	
3/5/2020 10:00:17	0.12	0.00	
3/5/2020 10:00:32	6.16	0.50	
3/5/2020 10:00:47	0.39	0.08	
3/5/2020 10:01:02	0.05	-0.04	
3/5/2020 10:01:17	0.10	0.03	
3/5/2020 10:01:32	0.00	-0.03	
3/5/2020 10:01:47	6.93	0.09	
3/5/2020 10:02:02	19.55	0.11	
3/5/2020 10:02:17	20.69	18.36	
3/5/2020 10:02:32	22.06	21.17	
3/5/2020 10:02:47	21.47	21.58	Post-test Bias and Drift Check:
3/5/2020 10:03:02	20.96	21.25	21.0% v db Oxygen:
3/5/2020 10:03:17	20.91	21.27	20.92 % v db Oxygen
3/5/2020 10:03:32	20.90	21.28	
3/5/2020 10:03:47	20.89	21.28	
3/5/2020 10:04:02	20.87	21.27	
3/5/2020 10:04:17	20.90	21.27	
3/5/2020 10:04:32	20.86	21.26	
3/5/2020 10:04:47	20.26	5.01	
3/5/2020 10:05:02	2.65	1.24	Post-test Bias and Drift Check:
3/5/2020 10:05:17	2.50	2.48	2.50% v db CO2:
3/5/2020 10:05:32	2.71	2.49	2.52 % v db CO2
3/5/2020 10:05:47	2.56	2.53	
3/5/2020 10:06:02	2.58	2.57	
3/5/2020 10:06:17	2.61	2.59	
3/5/2020 10:06:32	2.55	2.54	
3/5/2020 10:06:47	2.44	2.52	
3/5/2020 10:07:02	2.97	2.52	
3/5/2020 10:07:17	18.76	0.66	
3/5/2020 10:07:32	20.44	0.27	
3/5/2020 10:07:47	20.46	0.22	
3/5/2020 10:08:02	20.50	0.24	
3/5/2020 10:08:17	20.39	0.11	
3/5/2020 10:08:32	20.56	0.29	
3/5/2020 10:08:47	20.56	0.27	
3/5/2020 10:09:02	20.48	0.22	
3/5/2020 10:09:17	20.42	0.14	
3/5/2020 10:09:32	20.57	0.38	
3/5/2020 10:09:47	20.53	0.23	
3/5/2020 10:10:02	20.60	0.27	

15 sec avgs

RM FIELD DATA

Client Medline
Location Weukegen, IL
Source EO Control System
Date 3/5/2020

Date/Time	Common Stk Oxygen (% v db)	Common Stk CO2 (% v db)	Comments
3/5/2020 10:10:17	20.69	0.37	
3/5/2020 10:10:32	20.53	0.22	
3/5/2020 10:10:47	20.60	0.27	
3/5/2020 10:11:02	20.69	0.36	
3/5/2020 10:11:17	20.53	0.22	
3/5/2020 10:11:32	20.56	0.25	
3/5/2020 10:11:47	20.50	0.21	
3/5/2020 10:12:02	20.53	0.05	
3/5/2020 10:12:17	20.53	0.12	
3/5/2020 10:12:32	20.49	0.21	
3/5/2020 10:12:47	20.60	0.25	
3/5/2020 10:13:02	20.67	0.28	
3/5/2020 10:13:17	20.53	0.21	
3/5/2020 10:13:32	20.59	0.25	
3/5/2020 10:13:47	20.55	0.22	
3/5/2020 10:14:02	20.40	0.16	
3/5/2020 10:14:17	20.56	0.25	
3/5/2020 10:14:32	20.64	0.26	
3/5/2020 10:14:47	20.49	0.19	
3/5/2020 10:15:02	20.52	0.09	
3/5/2020 10:15:17	20.58	0.25	
3/5/2020 10:15:32	20.60	0.26	
3/5/2020 10:15:47	20.51	0.21	
3/5/2020 10:16:02	20.45	0.11	
3/5/2020 10:16:17	20.58	0.26	
3/5/2020 10:16:32	20.53	0.19	
3/5/2020 10:16:47	20.57	0.24	
3/5/2020 10:17:02	20.51	0.21	
3/5/2020 10:17:17	20.56	0.25	
3/5/2020 10:17:32	20.54	0.17	
3/5/2020 10:17:47	20.51	0.17	**Begin RA Test Run #2**
3/5/2020 10:18:02	20.52	0.21	
3/5/2020 10:18:17	20.42	0.14	
3/5/2020 10:18:32	20.55	0.24	
3/5/2020 10:18:47	20.52	0.21	
3/5/2020 10:19:02	20.54	0.35	
3/3/2020 10:19:17	20.52	0.11	
3/5/2020 10:19:32	20.54	0.24	
3/5/2020 10:19:47	20.50	0.21	
3/5/2020 10:20:02	20.51	0.11	
3/5/2020 10:20:17	20.42	0.11	
3/5/2020 10:20:32	20.40	0.10	
3/5/2020 10:20:47	20.38	0.09	
3/5/2020 10:21:02	20.51	0.11	
3/5/2020 10:21:17	20.51	0.21	
3/5/2020 10:21:32	20.52	0.21	
3/5/2020 10:21:47	20.51	0.19	
3/5/2020 10:22:02	20.49	0.20	
3/5/2020 10:22:17	20.49	0.20	
3/5/2020 10:22:32	20.51	0.20	
3/5/2020 10:22:47	20.40	0.09	
3/5/2020 10:23:02	20.55	0.27	
3/5/2020 10:23:17	20.55	0.35	
3/5/2020 10:23:32	20.52	0.15	
3/5/2020 10:23:47	20.72	0.36	
3/5/2020 10:24:02	20.56	0.28	
3/5/2020 10:24:17	20.52	0.20	
3/5/2020 10:24:32	20.56	0.34	
3/5/2020 10:24:47	20.50	0.22	
3/5/2020 10:25:02	20.55	0.17	
3/5/2020 10:25:17	20.50	0.24	
3/5/2020 10:25:32	20.56	0.38	
3/5/2020 10:25:47	20.51	0.20	
3/5/2020 10:26:02	20.59	0.26	
3/5/2020 10:26:17	20.67	0.26	
3/5/2020 10:26:32	20.49	0.19	
3/5/2020 10:26:47	20.52	0.20	
3/5/2020 10:27:02	20.54	0.10	
3/5/2020 10:27:17	20.61	0.26	
3/5/2020 10:27:32	20.63	0.24	
3/5/2020 10:27:47	20.54	0.21	
3/5/2020 10:28:02	20.57	0.24	
3/5/2020 10:28:17	20.49	0.20	
3/5/2020 10:28:32	20.61	0.27	
3/5/2020 10:28:47	20.59	0.23	
3/5/2020 10:29:02	20.45	0.22	
3/5/2020 10:29:17	20.68	0.27	
3/5/2020 10:29:32	20.52	0.21	
3/5/2020 10:29:47	20.61	0.24	
3/5/2020 10:30:02	20.54	0.09	
3/5/2020 10:30:17	20.60	0.23	
3/5/2020 10:30:32	20.58	0.35	
3/5/2020 10:30:47	20.65	0.25	

15 sec avgs

RM FIELD DATA

Client Medline
Location Waukegan, IL
Source EO Control System
Data 3/5/2020

Date/Time	Common Stk Oxygen (% v db)	Common Stk CO2 (% v db)	Comments
3/5/2020 10:31:02	20.54	0.18	
3/5/2020 10:31:17	20.54	0.20	
3/5/2020 10:31:32	20.42	0.08	
3/5/2020 10:31:47	20.58	0.26	
3/5/2020 10:32:02	20.60	0.25	
3/5/2020 10:32:17	20.58	0.24	
3/5/2020 10:32:32	20.58	0.24	
3/5/2020 10:32:47	20.57	0.18	
3/5/2020 10:33:02	20.57	0.26	
3/5/2020 10:33:17	20.53	0.20	
3/5/2020 10:33:32	20.57	0.36	
3/5/2020 10:33:47	20.46	0.20	
3/5/2020 10:34:02	20.66	0.24	
3/5/2020 10:34:17	20.53	0.23	
3/5/2020 10:34:32	20.57	0.21	
3/5/2020 10:34:47	20.54	0.18	
3/5/2020 10:35:02	20.37	0.09	
3/5/2020 10:35:17	20.54	0.21	
3/5/2020 10:35:32	20.54	0.20	
3/5/2020 10:35:47	20.54	0.20	
3/5/2020 10:36:02	20.43	0.17	
3/5/2020 10:36:17	20.58	0.24	
3/5/2020 10:36:32	20.55	0.16	
3/5/2020 10:36:47	20.58	0.24	
3/5/2020 10:37:02	20.52	0.19	
3/5/2020 10:37:17	20.54	0.22	
3/5/2020 10:37:32	20.60	0.24	
3/5/2020 10:37:47	20.54	0.27	
3/5/2020 10:38:02	20.61	0.25	
3/5/2020 10:38:17	20.43	0.17	
3/5/2020 10:38:32	20.65	0.35	
3/5/2020 10:38:47	20.50	0.20	
3/5/2020 10:39:02	20.45	0.08	
3/5/2020 10:39:17	20.58	0.27	
3/5/2020 10:39:32	20.60	0.25	
3/5/2020 10:39:47	20.59	0.24	
3/5/2020 10:40:02	20.58	0.24	
3/5/2020 10:40:17	20.57	0.25	
3/5/2020 10:40:32	20.57	0.23	
3/5/2020 10:40:47	20.55	0.16	
3/5/2020 10:41:02	20.43	0.14	
3/5/2020 10:41:17	20.74	0.35	
3/6/2020 10:41:32	20.55	0.19	
3/5/2020 10:41:47	20.54	0.21	
3/5/2020 10:42:02	20.45	0.11	
3/5/2020 10:42:17	20.44	0.17	
3/5/2020 10:42:32	20.57	0.24	
3/5/2020 10:42:47	20.50	0.17	
3/5/2020 10:43:02	20.61	0.25	
3/5/2020 10:43:17	20.57	0.22	
3/5/2020 10:43:32	20.53	0.23	
3/5/2020 10:43:47	20.57	0.23	
3/5/2020 10:44:02	20.66	0.24	
3/5/2020 10:44:17	20.49	0.18	
3/5/2020 10:44:32	20.53	0.20	
3/3/2020 10:44:47	20.53	0.19	
3/5/2020 10:45:02	20.53	0.20	
3/5/2020 10:45:17	20.54	0.23	
3/5/2020 10:45:32	20.59	0.23	
3/5/2020 10:45:47	20.67	0.34	
3/5/2020 10:46:02	20.52	0.21	
3/5/2020 10:46:17	20.56	0.25	
3/5/2020 10:46:32	20.56	0.38	
3/5/2020 10:46:47	20.50	0.19	
3/5/2020 10:47:02	20.53	0.20	
3/5/2020 10:47:17	20.53	0.20	
3/6/2020 10:47:32	20.53	0.19	
3/5/2020 10:47:47	20.42	0.15	End RA Test Run #2
3/5/2020 10:48:02	20.44	0.10	
3/5/2020 10:48:17	20.54	0.03	
3/5/2020 10:48:32	20.53	0.11	
3/5/2020 10:48:47	20.53	0.09	
3/5/2020 10:49:02	20.53	0.19	
3/5/2020 10:49:17	20.54	0.10	
3/5/2020 10:49:32	20.59	0.26	
3/5/2020 10:49:47	20.62	0.24	
3/5/2020 10:50:02	20.43	0.10	
3/5/2020 10:50:17	20.57	0.36	
3/5/2020 10:50:32	20.53	0.10	
3/5/2020 10:50:47	20.67	0.33	
3/5/2020 10:51:02	20.53	0.21	
3/5/2020 10:51:17	20.56	0.23	
3/5/2020 10:51:32	20.53	0.23	

15 sec avgs

RM FIELD DATA

Client Medline
Location Waukegan, IL
Source EO Control System
Date 3/5/2020

Date/Time	Common Stk Oxygen (% v db)	Common Stk CO2 (% v db)	Comments
3/5/2020 10:51:47	20.68	0.27	
3/5/2020 10:52:02	20.53	0.17	
3/5/2020 10:52:17	20.60	0.23	
3/5/2020 10:52:32	20.63	0.24	
3/5/2020 10:52:47	20.53	0.20	
3/5/2020 10:53:02	20.53	0.19	
3/5/2020 10:53:17	20.52	0.20	
3/5/2020 10:53:32	20.52	0.21	
3/5/2020 10:53:47	20.53	0.20	
3/5/2020 10:54:02	20.53	0.20	
3/5/2020 10:54:17	20.53	0.20	
3/5/2020 10:54:32	20.39	0.09	
3/5/2020 10:54:47	20.58	0.24	
3/5/2020 10:55:02	20.51	0.18	
3/5/2020 10:55:17	4.27	0.44	
3/5/2020 10:55:32	0.26	-0.02	
3/5/2020 10:55:47	0.14	0.01	
3/5/2020 10:56:02	0.06	-0.03	
3/5/2020 10:56:17	0.09	0.00	
3/5/2020 10:56:32	0.05	-0.13	
3/5/2020 10:56:47	0.23	0.12	
3/5/2020 10:57:02	0.04	-0.21	
3/5/2020 10:57:17	5.21	0.18	
3/5/2020 10:57:32	3.67	0.31	
3/5/2020 10:57:47	0.22	0.01	
3/5/2020 10:58:02	0.06	0.03	
3/5/2020 10:58:17	0.17	0.02	
3/5/2020 10:58:32	0.03	-0.03	
3/5/2020 10:58:47	1.45	0.02	
3/5/2020 10:59:02	18.74	0.18	
3/5/2020 10:59:17	2.14	-0.01	
3/5/2020 10:59:32	0.20	0.00	
3/5/2020 10:59:47	1.72	0.02	
3/5/2020 11:00:02	0.21	0.01	
3/5/2020 11:00:17	0.15	0.02	
3/5/2020 11:00:32	0.11	0.00	
3/5/2020 11:00:47	-0.01	-0.05	
3/5/2020 11:01:02	-0.10	-0.10	
3/5/2020 11:01:17	0.06	0.00	
3/5/2020 11:01:32	0.11	0.01	**Post-test Bias and Drift Check:**
3/5/2020 11:01:47	0.00	-0.04	**zero nitrogen:**
3/5/2020 11:02:02	-0.06	-0.06	**0.01 % v db Oxygen**
3/5/2020 11:02:17	0.08	0.01	**-0.02 % v db CO2**
3/5/2020 11:02:32	0.05	0.00	
3/5/2020 11:02:47	0.08	0.10	
3/5/2020 11:03:02	0.00	-0.04	
3/5/2020 11:03:17	0.01	0.03	
3/5/2020 11:03:32	2.02	1.83	
3/5/2020 11:03:47	2.49	2.40	**Post-test Bias and Drift Check:**
3/5/2020 11:04:02	2.53	2.48	**2.50% v db CO2:**
3/5/2020 11:04:17	2.53	2.49	**2.49 % v db CO2**
3/5/2020 11:04:32	2.55	2.48	
3/5/2020 11:04:47	2.56	2.49	
3/5/2020 11:05:02	2.57	2.47	
3/5/2020 11:05:17	2.54	2.45	
3/5/2020 11:05:32	12.20	1.27	
3/5/2020 11:05:47	20.46	18.41	
3/5/2020 11:06:02	22.11	22.32	
3/5/2020 11:06:17	21.45	21.80	
3/5/2020 11:06:32	21.12	21.42	**Post-test Bias and Drift Check:**
3/5/2020 11:06:47	20.86	21.24	**21.0% v db Oxygen:**
3/5/2020 11:07:02	20.85	21.25	**20.85 % v db Oxygen**
3/5/2020 11:07:17	20.84	21.25	
3/5/2020 11:07:32	20.85	21.26	
3/5/2020 11:07:47	20.88	21.33	
3/5/2020 11:08:02	20.89	21.28	
3/5/2020 11:08:17	20.64	12.81	
3/5/2020 11:08:32	20.52	1.18	
3/5/2020 11:08:47	20.50	0.39	
3/5/2020 11:09:02	20.54	0.38	
3/5/2020 11:09:17	20.51	0.13	
3/5/2020 11:09:32	20.56	0.30	
3/5/2020 11:09:47	20.59	0.39	
3/5/2020 11:10:02	20.56	0.29	
3/5/2020 11:10:17	20.53	0.30	
3/5/2020 11:10:32	20.42	0.15	
3/5/2020 11:10:47	20.52	0.08	
3/5/2020 11:11:02	20.58	0.28	
3/5/2020 11:11:17	20.65	0.36	
3/5/2020 11:11:32	20.51	0.23	
3/5/2020 11:11:47	20.59	0.28	
3/5/2020 11:12:02	20.54	0.20	
3/5/2020 11:12:17	20.50	0.22	

15 sec avgs

RM FIELD DATA

Client Medline
Location Waukegan, IL
Source EO Control System
Date 3/5/2020

Date/Time	Common Stk Oxygen (% v db)	Common Stk CO2 (% v db)	Comments
3/5/2020 11:12:32	20.59	0.26	
3/5/2020 11:12:47	20.56	0.26	
3/5/2020 11:13:02	20.57	0.24	
3/5/2020 11:13:17	20.66	0.26	
3/5/2020 11:13:32	20.51	0.20	
3/5/2020 11:13:47	20.53	0.20	
3/5/2020 11:14:02	20.55	0.27	
3/5/2020 11:14:17	20.58	0.23	
3/5/2020 11:14:32	20.52	0.24	
3/5/2020 11:14:47	20.55	0.18	
3/5/2020 11:15:02	20.58	0.26	
3/5/2020 11:15:17	20.56	0.21	
3/5/2020 11:15:32	20.51	0.21	
3/5/2020 11:15:47	20.53	0.08	
3/5/2020 11:16:02	20.42	0.10	
3/5/2020 11:16:17	20.40	0.08	
3/5/2020 11:16:32	20.52	0.07	
3/5/2020 11:16:47	20.53	0.21	
3/5/2020 11:17:02	20.53	0.10	
3/5/2020 11:17:17	20.54	0.28	
3/5/2020 11:17:32	20.56	0.25	
3/5/2020 11:17:47	20.68	0.35	
3/5/2020 11:18:02	20.57	0.23	
3/5/2020 11:18:17	20.50	0.20	
3/5/2020 11:18:32	20.56	0.26	
3/5/2020 11:18:47	20.55	0.18	
3/5/2020 11:19:02	20.53	0.11	
3/5/2020 11:19:17	20.44	0.12	
3/5/2020 11:19:32	20.44	0.09	
3/5/2020 11:19:47	20.43	0.13	
3/5/2020 11:20:02	20.53	0.22	
3/5/2020 11:20:17	20.56	0.24	
3/5/2020 11:20:32	20.52	0.18	
3/5/2020 11:20:47	20.52	0.08	
3/5/2020 11:21:02	20.59	0.24	
3/5/2020 11:21:17	20.58	0.24	
3/5/2020 11:21:32	20.37	0.09	
3/5/2020 11:21:47	20.58	0.24	
3/5/2020 11:22:02	20.66	0.34	
3/5/2020 11:22:17	20.50	0.19	
3/5/2020 11:22:32	20.52	0.20	
3/5/2020 11:22:47	20.54	0.05	
3/5/2020 11:23:02	20.60	0.26	
3/5/2020 11:23:17	20.59	0.24	
3/5/2020 11:23:32	20.53	0.20	
3/5/2020 11:23:47	20.52	0.20	
3/5/2020 11:24:02	20.51	0.21	
3/5/2020 11:24:17	20.53	0.19	
3/5/2020 11:24:32	20.53	0.12	
3/5/2020 11:24:47	20.53	0.09	
3/5/2020 11:25:02	20.53	0.06	
3/5/2020 11:25:17	20.54	0.15	
3/5/2020 11:25:32	20.39	0.09	
3/5/2020 11:25:47	20.49	0.19	
3/5/2020 11:26:02	20.58	0.23	
3/5/2020 11:26:17	20.67	0.33	
3/5/2020 11:26:32	20.55	0.21	
3/5/2020 11:26:47	20.50	0.18	
3/5/2020 11:27:02	20.51	0.18	
3/5/2020 11:27:17	20.53	0.21	
3/5/2020 11:27:32	20.42	0.08	
3/5/2020 11:27:47	20.54	0.21	
3/5/2020 11:28:02	20.58	0.24	
3/5/2020 11:28:17	20.68	0.36	
3/5/2020 11:28:32	20.53	0.20	
3/5/2020 11:28:47	20.56	0.24	
3/5/2020 11:29:02	20.50	0.20	
3/5/2020 11:29:17	20.50	0.18	
3/5/2020 11:29:32	20.60	0.25	
3/5/2020 11:29:47	20.45	0.20	Begin RA Test Run #3
3/5/2020 11:30:02	20.56	0.23	
3/5/2020 11:30:17	20.65	0.34	
3/5/2020 11:30:32	20.55	0.22	
3/5/2020 11:30:47	20.55	0.21	
3/5/2020 11:31:02	20.59	0.16	
3/3/2020 11:31:17	20.51	0.18	
3/5/2020 11:31:32	20.53	0.21	
3/5/2020 11:31:47	20.53	0.09	
3/5/2020 11:32:02	20.57	0.26	
3/5/2020 11:32:17	20.56	0.24	
3/5/2020 11:32:32	20.52	0.17	
3/5/2020 11:32:47	20.52	0.20	
3/5/2020 11:33:02	20.57	0.24	

15 sec avgs

RM FIELD DATA

Client Medline
Location Waukegan, IL
Source EO Control System
Date 3/5/2020

Date/Time	Common Stk Oxygen (% v db)	Common Stk CO2 (% v db)	Comments
3/5/2020 11:33:17	20.52	0.20	
3/5/2020 11:33:32	20.60	0.24	
3/5/2020 11:33:47	20.55	0.42	
3/5/2020 11:34:02	20.56	0.24	
3/5/2020 11:34:17	20.50	0.18	
3/5/2020 11:34:32	20.37	0.08	
3/5/2020 11:34:47	20.55	0.24	
3/5/2020 11:33:02	20.43	0.10	
3/5/2020 11:35:17	20.69	0.23	
3/5/2020 11:35:32	20.42	0.15	
3/5/2020 11:35:47	20.56	0.23	
3/5/2020 11:36:02	20.67	0.29	
3/5/2020 11:36:17	20.51	0.20	
3/5/2020 11:36:32	20.52	0.18	
3/5/2020 11:36:47	20.52	0.05	
3/5/2020 11:37:02	20.36	0.08	
3/5/2020 11:37:17	20.51	0.22	
3/5/2020 11:37:32	20.55	0.23	
3/5/2020 11:37:47	20.65	0.35	
3/5/2020 11:38:02	20.52	0.19	
3/5/2020 11:36:17	20.51	0.20	
3/5/2020 11:38:32	20.43	0.19	
3/5/2020 11:38:47	20.55	0.24	
3/5/2020 11:33:02	20.51	0.17	
3/5/2020 11:39:17	20.42	0.15	
3/5/2020 11:39:32	20.67	0.28	
3/5/2020 11:39:47	20.40	0.13	
3/5/2020 11:40:02	20.54	0.22	
3/5/2020 11:40:17	20.57	0.25	
3/5/2020 11:40:32	20.46	0.18	
3/5/2020 11:40:47	20.57	0.24	
3/5/2020 11:41:02	20.48	0.19	
3/5/2020 11:41:17	20.56	0.24	
3/5/2020 11:41:32	20.47	0.19	
3/5/2020 11:41:47	20.52	0.17	
3/5/2020 11:42:02	20.50	0.20	
3/5/2020 11:42:17	20.57	0.24	
3/5/2020 11:42:32	20.54	0.33	
3/5/2020 11:42:47	20.53	0.16	
3/5/2020 11:43:02	20.52	0.20	
3/5/2020 11:43:17	20.56	0.23	
3/5/2020 11:43:32	20.64	0.24	
3/5/2020 11:43:47	20.52	0.17	
3/5/2020 11:44:02	20.48	0.18	
3/5/2020 11:44:17	20.51	0.19	
3/5/2020 11:44:32	20.51	0.20	
3/5/2020 11:44:47	20.45	0.10	
3/5/2020 11:45:02	20.51	0.22	
3/5/2020 11:45:17	20.55	0.23	
3/5/2020 11:45:32	20.50	0.20	
3/5/2020 11:45:47	20.54	0.35	
3/5/2020 11:46:02	20.51	0.11	
3/5/2020 11:46:17	20.57	0.24	
3/5/2020 11:46:32	20.54	0.24	
3/5/2020 11:46:47	20.65	0.30	
3/5/2020 11:47:02	20.53	0.22	
3/5/2020 11:47:17	20.49	0.19	
3/5/2020 11:47:32	20.40	0.17	
3/5/2020 11:47:47	20.57	0.22	
3/5/2020 11:48:02	20.67	0.34	
3/5/2020 11:48:17	20.55	0.20	
3/5/2020 11:48:32	20.51	0.19	
3/5/2020 11:48:47	20.58	0.26	
3/5/2020 11:49:02	20.66	0.29	
3/5/2020 11:49:17	20.51	0.19	
3/5/2020 11:49:32	20.59	0.25	
3/5/2020 11:49:47	20.63	0.35	
3/5/2020 11:50:02	20.51	0.19	
3/5/2020 11:50:17	20.56	0.24	
3/5/2020 11:50:32	20.61	0.25	
3/5/2020 11:50:47	20.48	0.18	
3/5/2020 11:51:02	20.51	0.20	
3/5/2020 11:51:17	20.54	0.26	
3/5/2020 11:51:32	20.60	0.24	
3/5/2020 11:51:47	20.44	0.18	
3/5/2020 11:52:02	20.57	0.25	
3/5/2020 11:52:17	20.51	0.21	
3/5/2020 11:52:32	20.62	0.23	
3/5/2020 11:52:47	20.39	0.10	
3/5/2020 11:53:02	20.55	0.24	
3/5/2020 11:53:17	20.49	0.19	
3/5/2020 11:53:32	20.58	0.25	
3/5/2020 11:53:47	20.64	0.33	

15 sec avgs

RM FIELD DATA

Client Medline
Location Waukegan, IL
Source EO Control System
Date 3/5/2020

Date/Time	Common Stk Oxygen (% v db)	Common Stk CO2 (% v db)	Comments
3/5/2020 11:54:02	20.52	0.17	
3/5/2020 11:54:17	20.51	0.19	
3/5/2020 11:54:32	20.52	0.21	
3/5/2020 11:54:47	20.53	0.37	
3/5/2020 11:55:02	20.48	0.19	
3/5/2020 11:55:17	20.41	0.19	
3/5/2020 11:55:32	20.53	0.23	
3/5/2020 11:55:47	20.49	0.19	
3/5/2020 11:56:02	20.54	0.23	
3/5/2020 11:56:17	20.47	0.19	
3/5/2020 11:56:32	20.42	0.10	
3/5/2020 11:56:47	20.57	0.25	
3/5/2020 11:57:02	20.53	0.25	
3/5/2020 11:57:17	20.46	0.19	
3/5/2020 11:57:32	20.54	0.23	
3/5/2020 11:57:47	20.43	0.20	
3/5/2020 11:58:02	20.53	0.23	
3/5/2020 11:58:17	20.48	0.16	
3/5/2020 11:58:32	20.47	0.09	
3/5/2020 11:58:47	20.53	0.24	
3/5/2020 11:59:02	20.47	0.19	
3/5/2020 11:59:17	20.56	0.25	
3/5/2020 11:59:32	20.51	0.17	
3/5/2020 11:59:47	20.49	0.19	End RA Test Run #3
3/5/2020 12:00:02	20.49	0.19	
3/5/2020 12:00:17	20.48	0.18	
3/5/2020 12:00:32	20.61	0.24	
3/5/2020 12:00:47	20.64	0.25	
3/5/2020 12:01:02	20.65	0.29	
3/5/2020 12:01:17	20.71	0.34	
3/5/2020 12:01:32	20.64	0.25	
3/5/2020 12:01:47	20.53	0.22	
3/5/2020 12:02:02	10.58	2.36	
3/5/2020 12:02:17	0.70	0.18	
3/5/2020 12:02:32	0.14	-0.04	
3/5/2020 12:02:47	0.06	-0.03	
3/5/2020 12:03:02	0.18	0.02	
3/5/2020 12:03:17	-0.01	-0.12	
3/5/2020 12:03:32	15.58	0.19	
3/5/2020 12:03:47	20.11	0.17	
3/5/2020 12:04:02	20.35	0.08	
3/5/2020 12:04:17	20.46	0.26	
3/5/2020 12:04:32	20.44	0.27	
3/5/2020 12:04:47	20.41	0.19	
3/5/2020 12:05:02	20.47	0.23	
3/5/2020 12:05:17	20.33	0.09	
3/5/2020 12:05:32	20.57	0.33	
3/5/2020 12:05:47	20.45	0.19	
3/5/2020 12:06:02	20.45	0.09	
3/5/2020 12:06:17	20.46	0.20	
3/5/2020 12:06:32	20.44	0.19	
3/5/2020 12:06:47	20.45	0.19	
3/5/2020 12:07:02	20.45	0.20	
3/5/2020 12:07:17	20.45	0.19	
3/5/2020 12:07:32	20.45	0.19	
3/5/2020 12:07:47	20.46	0.19	
3/5/2020 12:08:02	20.48	0.27	
3/5/2020 12:08:17	20.56	0.23	
3/5/2020 12:08:32	20.46	0.21	
3/5/2020 12:08:47	20.61	0.26	
3/5/2020 12:09:02	20.46	0.19	
3/5/2020 12:09:17	20.47	0.15	
3/5/2020 12:09:32	20.35	0.09	
3/5/2020 12:09:47	20.47	0.22	
3/5/2020 12:10:02	20.52	0.22	
3/5/2020 12:10:17	20.57	0.24	
3/5/2020 12:10:32	20.50	0.16	
3/5/2020 12:10:47	20.51	0.17	
3/5/2020 12:11:02	20.47	0.18	
3/5/2020 12:11:17	20.45	0.18	
3/5/2020 12:11:32	20.47	0.19	
3/5/2020 12:11:47	20.47	0.21	
3/5/2020 12:12:02	20.53	0.24	
3/5/2020 12:12:17	20.50	0.24	
3/5/2020 12:12:32	20.51	0.20	
3/5/2020 12:12:47	20.49	0.17	
3/5/2020 12:13:02	20.44	0.18	
3/5/2020 12:13:17	20.45	0.19	
3/5/2020 12:13:32	20.31	0.09	
3/5/2020 12:13:47	20.50	0.26	
3/5/2020 12:14:02	20.46	0.26	
3/5/2020 12:14:17	20.37	0.11	
3/5/2020 12:14:32	20.48	0.09	

15 sec avgs

RM FIELD DATA

Client Medline
Location Waukegan, IL
Source EO Control System
Date 3/5/2020

Date/Time	Common Stk Oxygen (% v db)	Common Stk CO2 (% v db)	Comments
3/5/2020 12:14:47	20.47	0.19	
3/5/2020 12:15:02	19.67	0.23	
3/5/2020 12:15:17	1.90	0.03	
3/5/2020 12:15:32	0.23	-0.01	
3/5/2020 12:15:47	0.21	0.01	
3/5/2020 12:16:02	0.21	0.07	
3/5/2020 12:16:17	0.03	-0.06	
3/5/2020 12:16:32	0.37	0.03	
3/5/2020 12:16:47	6.03	0.05	
3/5/2020 12:17:02	3.96	0.02	
3/5/2020 12:17:17	0.84	0.01	
3/5/2020 12:17:32	-0.03	-0.07	
3/5/2020 12:17:47	0.18	0.11	
3/5/2020 12:18:02	-0.08	-0.14	
3/5/2020 12:18:17	0.15	0.08	Post-test Bias and Drift Check:
3/5/2020 12:18:32	-0.02	-0.13	zero nitrogen:
3/5/2020 12:18:47	0.05	-0.01	0.03 % v db Oxygen
3/5/2020 12:19:02	0.01	-0.04	-0.04 % v db CO2
3/5/2020 12:19:17	0.07	0.01	
3/5/2020 12:19:32	-0.01	-0.04	
3/5/2020 12:19:47	0.05	-0.01	
3/5/2020 12:20:02	0.01	-0.05	
3/5/2020 12:20:17	0.08	0.11	
3/5/2020 12:20:32	13.02	0.11	
3/5/2020 12:20:47	0.99	0.03	
3/5/2020 12:21:02	2.37	2.14	
3/5/2020 12:21:17	2.43	2.39	Post-test Bias and Drift Check:
3/5/2020 12:21:32	2.39	2.43	2.50% v db CO2:
3/5/2020 12:21:47	2.68	2.60	2.49 % v db CO2
3/5/2020 12:22:02	2.49	2.44	
3/5/2020 12:22:17	2.50	2.49	
3/5/2020 12:22:32	2.68	2.57	
3/5/2020 12:22:47	2.49	2.41	
3/5/2020 12:23:02	2.41	2.35	
3/5/2020 12:23:17	17.53	0.58	
3/5/2020 12:23:32	19.87	16.14	
3/5/2020 12:23:47	22.17	22.28	
3/5/2020 12:24:02	21.83	22.12	Post-test Bias and Drift Check:
3/5/2020 12:24:17	20.93	21.29	21.0% v db Oxygen:
3/5/2020 12:24:32	20.93	21.39	20.88 % v db Oxygen
3/5/2020 12:24:47	20.82	21.24	
3/5/2020 12:25:02	20.85	21.24	
3/5/2020 12:25:17	20.92	21.30	
3/5/2020 12:25:32	20.99	21.33	
3/5/2020 12:25:47	20.83	21.25	
3/5/2020 12:26:02	20.61	11.02	
3/5/2020 12:26:17	20.37	0.88	
3/5/2020 12:26:32	20.44	0.39	
3/5/2020 12:26:47	20.57	0.37	
3/5/2020 12:27:02	20.53	0.32	
3/5/2020 12:27:17	20.49	0.24	
3/5/2020 12:27:32	20.51	0.13	
3/5/2020 12:27:47	20.40	0.16	
3/5/2020 12:28:02	20.59	0.29	
3/5/2020 12:28:17	20.55	0.28	
3/5/2020 12:28:32	20.61	0.27	
3/5/2020 12:28:47	20.51	0.22	
3/5/2020 12:29:02	20.58	0.28	
3/5/2020 12:29:17	20.55	0.28	
3/5/2020 12:29:32	20.49	0.21	
3/5/2020 12:29:47	20.41	0.16	Begin RA Test Run #4
3/5/2020 12:30:02	20.54	0.41	
3/5/2020 12:30:17	20.41	0.13	
3/5/2020 12:30:32	20.61	0.24	
3/5/2020 12:30:47	20.51	0.13	
3/5/2020 12:31:02	20.58	0.27	
3/5/2020 12:31:17	20.53	0.24	
3/5/2020 12:31:32	20.50	0.20	
3/5/2020 12:31:47	20.41	0.14	
3/5/2020 12:32:02	20.54	0.24	
3/5/2020 12:32:17	20.64	0.26	
3/5/2020 12:32:32	20.51	0.20	
3/5/2020 12:32:47	20.50	0.20	
3/5/2020 12:33:02	20.49	0.20	
3/5/2020 12:33:17	20.50	0.20	
3/5/2020 12:33:32	20.43	0.21	
3/5/2020 12:33:47	20.48	0.11	
3/5/2020 12:34:02	20.55	0.25	
3/5/2020 12:34:17	20.47	0.20	
3/5/2020 12:34:32	20.56	0.24	
3/5/2020 12:34:47	20.49	0.18	
3/5/2020 12:35:02	20.48	0.10	
3/5/2020 12:35:17	20.57	0.25	

15 sec avgs

RM FIELD DATA

Client Medline
Location Weukegan, IL
Source EO Control System
Date 3/5/2020

Date/Time	Common Stk Oxygen (% v db)	Common Stk CO2 (% v db)	Comments
3/5/2020 12:35:32	20.53	0.23	
3/5/2020 12:35:47	20.46	0.19	
3/5/2020 12:36:02	20.49	0.20	
3/5/2020 12:36:17	20.51	0.26	
3/5/2020 12:36:32	20.54	0.24	
3/5/2020 12:36:47	20.46	0.19	
3/5/2020 12:37:02	20.38	0.08	
3/5/2020 12:37:17	20.52	0.23	
3/5/2020 12:37:32	20.51	0.20	
3/5/2020 12:37:47	20.53	0.33	
3/5/2020 12:38:02	20.49	0.20	
3/5/2020 12:38:17	20.57	0.26	
3/5/2020 12:38:32	20.63	0.33	
3/5/2020 12:38:47	20.49	0.19	
3/5/2020 12:39:02	20.54	0.24	
3/5/2020 12:39:17	20.44	0.19	
3/5/2020 12:39:32	20.48	0.10	
3/5/2020 12:39:47	20.45	0.21	
3/5/2020 12:40:02	20.49	0.27	
3/5/2020 12:40:17	20.51	0.23	
3/5/2020 12:40:32	20.50	0.20	
3/5/2020 12:40:47	20.38	0.19	
3/5/2020 12:41:02	20.60	0.29	
3/5/2020 12:41:17	20.47	0.05	
3/5/2020 12:41:32	20.54	0.25	
3/5/2020 12:41:47	20.50	0.23	
3/5/2020 12:42:02	20.45	0.19	
3/5/2020 12:42:17	20.30	0.26	
3/5/2020 12:42:32	20.36	0.10	
3/5/2020 12:42:47	20.57	0.24	
3/5/2020 12:43:02	20.42	0.19	
3/5/2020 12:43:17	20.57	0.25	
3/5/2020 12:43:32	20.38	0.19	
3/5/2020 12:43:47	20.62	0.34	
3/5/2020 12:44:02	20.44	0.20	
3/5/2020 12:44:17	20.46	0.08	
3/5/2020 12:44:32	20.46	0.21	
3/5/2020 12:44:47	20.49	0.33	
3/5/2020 12:45:02	20.37	0.10	
3/5/2020 12:45:17	20.42	0.19	
3/5/2020 12:45:32	20.49	0.36	
3/5/2020 12:45:47	20.37	0.11	
3/5/2020 12:46:02	20.49	0.17	
3/5/2020 12:46:17	20.59	0.25	
3/5/2020 12:46:32	20.41	0.19	
3/5/2020 12:46:47	20.48	0.26	
3/5/2020 12:47:02	20.58	0.34	
3/5/2020 12:47:17	20.45	0.20	
3/5/2020 12:47:32	20.50	0.25	
3/5/2020 12:47:47	20.45	0.19	
3/5/2020 12:48:02	20.52	0.24	
3/5/2020 12:48:17	20.41	0.19	
3/5/2020 12:48:32	20.36	0.11	
3/5/2020 12:48:47	20.51	0.24	
3/5/2020 12:49:02	20.56	0.25	
3/5/2020 12:49:17	20.45	0.19	
3/5/2020 12:48:32	20.52	0.23	
3/5/2020 12:49:47	20.42	0.19	
3/5/2020 12:50:02	20.47	0.27	
3/5/2020 12:50:17	20.49	0.34	
3/5/2020 12:50:32	20.42	0.19	
3/5/2020 12:50:47	20.35	0.10	
3/5/2020 12:51:02	20.49	0.22	
3/5/2020 12:51:17	20.45	0.20	
3/5/2020 12:51:32	20.32	0.26	
3/5/2020 12:51:47	20.49	0.23	
3/5/2020 12:52:02	20.49	0.23	
3/5/2020 12:52:17	20.57	0.25	
3/5/2020 12:52:32	20.31	0.08	
3/5/2020 12:52:47	20.49	0.35	
3/5/2020 12:53:02	20.45	0.10	
3/5/2020 12:53:17	20.48	0.30	
3/5/2020 12:53:32	20.44	0.19	
3/5/2020 12:53:47	20.35	0.14	
3/5/2020 12:54:02	20.47	0.27	
3/5/2020 12:54:17	20.51	0.24	
3/5/2020 12:54:32	20.49	0.23	
3/5/2020 12:54:47	20.47	0.18	
3/5/2020 12:55:02	20.48	0.24	
3/5/2020 12:55:17	20.46	0.18	
3/5/2020 12:55:32	20.39	0.20	
3/5/2020 12:55:47	20.49	0.23	
3/5/2020 12:56:02	20.50	0.17	

15 sec avgs

RM FIELD DATA

Client Medline
Location Waukegan, IL
Source EO Control System
Date 3/5/2020

Date/Time	Common Stk Oxygen (% v db)	Common Stk CO2 (% v db)	Comments
3/5/2020 12:56:17	20.45	0.20	
3/5/2020 12:56:32	20.35	0.16	
3/5/2020 12:56:47	20.52	0.25	
3/5/2020 12:57:02	20.60	0.30	
3/5/2020 12:57:17	20.46	0.20	
3/5/2020 12:57:32	20.48	0.26	
3/5/2020 12:57:47	20.49	0.23	
3/5/2020 12:58:02	20.46	0.17	
3/5/2020 12:58:17	20.43	0.20	
3/5/2020 12:58:32	20.35	0.08	
3/5/2020 12:59:47	20.49	0.23	
3/5/2020 12:59:02	20.36	0.15	
3/5/2020 12:59:17	20.43	0.18	
3/5/2020 12:59:32	20.50	0.23	
3/5/2020 12:53:47	20.46	0.27	End RA Test Run #4
3/5/2020 13:00:02	20.45	0.20	
3/5/2020 13:00:17	20.53	0.23	
3/5/2020 13:00:32	20.61	0.26	
3/5/2020 13:00:47	20.44	0.21	
3/5/2020 13:01:02	17.22	8.85	
3/5/2020 13:01:17	1.36	0.75	
3/5/2020 13:01:32	0.05	-0.02	
3/5/2020 13:01:47	0.14	0.04	
3/5/2020 13:02:02	0.20	0.09	
3/5/2020 13:02:17	0.03	-0.02	Post-test Bias and Drift Check:
3/5/2020 13:02:32	-0.03	-0.03	zero nitrogen:
3/5/2020 13:02:47	0.07	0.00	0.04 % v db Oxygen
3/5/2020 13:03:02	0.09	0.02	-0.01 % v db CO2
3/5/2020 13:03:17	0.02	-0.03	
3/5/2020 13:03:32	-0.08	-0.06	
3/5/2020 13:03:47	0.08	0.01	
3/5/2020 13:04:02	0.16	0.04	
3/5/2020 13:04:17	0.02	-0.03	
3/5/2020 13:04:32	0.07	0.01	
3/5/2020 13:04:47	-0.02	-0.04	
3/5/2020 13:05:02	0.00	-0.13	
3/5/2020 13:05:17	0.07	0.00	
3/5/2020 13:05:32	6.51	0.08	
3/5/2020 13:05:47	2.53	0.27	
3/5/2020 13:06:02	0.12	-0.11	
3/5/2020 13:06:17	-0.04	-0.04	
3/5/2020 13:06:32	0.08	0.01	
3/5/2020 13:06:47	0.05	0.09	
3/5/2020 13:07:02	0.04	-0.06	
3/5/2020 13:07:17	0.01	-0.03	
3/5/2020 13:07:32	0.00	0.01	
3/5/2020 13:07:47	9.74	0.13	
3/5/2020 13:08:02	0.69	0.16	
3/5/2020 13:08:17	4.04	3.89	
3/5/2020 13:08:32	21.15	21.11	Post-test Bias and Drift Check:
3/5/2020 13:08:47	21.09	21.42	21.0% v db Oxygen:
3/5/2020 13:09:02	20.86	21.08	20.95 % v db Oxygen
3/5/2020 13:09:17	20.93	21.24	
3/5/2020 13:09:32	20.91	21.25	
3/5/2020 13:09:47	20.83	21.21	
3/5/2020 13:10:02	20.87	21.26	
3/5/2020 13:10:17	20.73	21.02	
3/5/2020 13:10:32	16.43	6.53	
3/5/2020 13:10:47	1.95	1.44	Post-test Bias and Drift Check:
3/5/2020 13:11:02	2.48	2.51	2.50% v db CO2:
3/5/2020 13:11:17	2.50	2.53	2.54 % v db CO2
3/5/2020 13:11:32	2.55	2.56	
3/5/2020 13:11:47	2.51	2.46	
3/5/2020 13:12:02	2.55	2.65	
3/5/2020 13:12:17	2.50	2.52	
3/5/2020 13:12:32	2.51	2.51	
3/5/2020 13:12:47	2.43	2.50	
3/5/2020 13:13:02	2.55	2.55	
3/5/2020 13:13:17	2.51	2.50	
3/5/2020 13:13:32	2.52	2.56	
3/5/2020 13:13:47	2.55	2.54	
3/5/2020 13:14:02	7.65	1.83	
3/5/2020 13:14:17	19.64	0.23	
3/5/2020 13:14:32	20.45	0.29	
3/5/2020 13:14:47	20.47	0.37	
3/5/2020 13:15:02	20.45	0.22	
3/5/2020 13:15:17	20.54	0.27	
3/5/2020 13:15:32	20.61	0.37	
3/5/2020 13:15:47	20.47	0.21	
3/5/2020 13:16:02	20.51	0.25	
3/5/2020 13:16:17	20.48	0.22	
3/5/2020 13:16:32	20.53	0.24	
3/5/2020 13:16:47	20.52	0.25	

15 sec avgs

RM FIELD DATA

Client Medline
Location Waukegan, IL
Source EO Control System
Date 3/5/2020

Date/Time	Common Stk Oxygen (% v db)	Common Stk CO2 (% v db)	Comments
3/5/2020 13:17:02	20.62	0.32	
3/5/2020 13:17:17	20.54	0.22	
3/5/2020 13:17:32	20.47	0.19	
3/5/2020 13:17:47	20.48	0.21	
3/5/2020 13:18:02	20.62	0.26	
3/5/2020 13:18:17	20.40	0.09	
3/5/2020 13:18:32	20.53	0.39	
3/5/2020 13:18:47	20.45	0.19	
3/5/2020 13:19:02	20.38	0.16	
3/5/2020 13:19:17	20.65	0.35	
3/5/2020 13:19:32	20.49	0.20	
3/5/2020 13:19:47	20.57	0.25	
3/5/2020 13:20:02	20.53	0.21	
3/5/2020 13:20:17	20.48	0.10	
3/5/2020 13:20:32	20.53	0.24	
3/5/2020 13:20:47	20.51	0.20	
3/5/2020 13:21:02	20.53	0.35	
3/5/2020 13:21:17	20.43	0.19	
3/5/2020 13:21:32	20.49	0.17	
3/5/2020 13:21:47	20.57	0.25	
3/5/2020 13:22:02	20.46	0.19	
3/5/2020 13:22:17	20.51	0.27	
3/5/2020 13:22:32	20.71	0.35	
3/5/2020 13:22:47	20.51	0.17	
3/5/2020 13:23:02	20.51	0.17	
3/5/2020 13:23:17	20.48	0.19	
3/5/2020 13:23:32	20.38	0.16	
3/5/2020 13:23:47	20.55	0.25	
3/5/2020 13:24:02	20.64	0.34	
3/5/2020 13:24:17	20.50	0.20	
3/5/2020 13:24:32	20.55	0.24	
3/5/2020 13:24:47	20.48	0.19	Begin RA Test Run #5
3/5/2020 13:25:02	20.40	0.10	
3/5/2020 13:25:17	20.58	0.25	
3/5/2020 13:25:32	20.56	0.22	
3/5/2020 13:25:47	20.64	0.28	
3/5/2020 13:26:02	20.53	0.23	
3/5/2020 13:26:17	20.47	0.17	
3/5/2020 13:26:32	20.46	0.17	
3/5/2020 13:26:47	20.48	0.17	
3/5/2020 13:27:02	20.50	0.18	
3/5/2020 13:27:17	20.46	0.19	
3/5/2020 13:27:32	20.47	0.19	
3/5/2020 13:27:47	20.39	0.12	
3/5/2020 13:28:02	20.55	0.25	
3/5/2020 13:28:17	20.60	0.34	
3/5/2020 13:28:32	20.48	0.20	
3/5/2020 13:28:47	20.51	0.24	
3/5/2020 13:29:02	20.47	0.26	
3/5/2020 13:29:17	20.46	0.19	
3/5/2020 13:29:32	20.50	0.24	
3/5/2020 13:29:47	20.44	0.18	
3/5/2020 13:30:02	20.42	0.19	
3/5/2020 13:30:17	20.67	0.35	
3/5/2020 13:30:32	20.47	0.04	
3/5/2020 13:30:47	20.54	0.23	
3/5/2020 13:31:02	20.51	0.23	
3/5/2020 13:31:17	20.65	0.36	
3/5/2020 13:31:32	20.48	0.16	
3/5/2020 13:31:47	20.47	0.20	
3/5/2020 13:32:02	20.48	0.26	
3/5/2020 13:32:17	20.51	0.23	
3/5/2020 13:32:32	20.50	0.23	
3/5/2020 13:32:47	20.50	0.37	
3/5/2020 13:33:02	20.49	0.17	
3/5/2020 13:33:17	20.44	0.10	
3/5/2020 13:33:32	20.51	0.24	
3/5/2020 13:33:47	20.49	0.17	
3/5/2020 13:34:02	20.47	0.18	
3/5/2020 13:34:17	20.43	0.09	
3/5/2020 13:34:32	20.46	0.22	
3/5/2020 13:34:47	20.51	0.23	
3/5/2020 13:35:02	20.49	0.16	
3/5/2020 13:33:17	20.38	0.11	
3/5/2020 13:38:32	20.49	0.23	
3/5/2020 13:35:47	20.46	0.20	
3/5/2020 13:36:02	20.50	0.24	
3/5/2020 13:36:17	20.45	0.17	
3/5/2020 13:36:32	20.32	0.07	
3/5/2020 13:36:47	20.49	0.24	
3/5/2020 13:37:02	20.41	0.19	
3/5/2020 13:37:17	20.46	0.19	
3/5/2020 13:37:32	20.47	0.27	

15 sec avgs

RM FIELD DATA

Client Medline
Location Waukegan, IL
Source EO Control System
Date 3/5/2020

Date/Time	Common Stk Oxygen (% v db)	Common Stk CO2 (% v db)	Comments
3/5/2020 13:37:47	20.50	0.24	
3/5/2020 13:38:02	20.53	0.22	
3/5/2020 13:38:17	20.46	0.02	
3/5/2020 13:38:32	20.50	0.25	
3/5/2020 13:38:47	20.47	0.19	
3/5/2020 13:38:02	20.52	0.23	
3/5/2020 13:39:17	20.45	0.18	
3/5/2020 13:39:32	20.51	0.26	
3/5/2020 13:39:47	20.47	0.16	
3/5/2020 13:40:02	20.47	0.26	
3/5/2020 13:40:17	20.47	0.18	
3/5/2020 13:40:32	20.37	0.18	
3/5/2020 13:40:47	20.63	0.34	
3/5/2020 13:41:02	20.36	0.09	
3/5/2020 13:41:17	20.61	0.27	
3/5/2020 13:41:32	20.44	0.09	
3/5/2020 13:41:47	20.53	0.26	
3/5/2020 13:42:02	20.50	0.23	
3/5/2020 13:42:17	20.44	0.17	
3/5/2020 13:42:32	20.46	0.23	
3/5/2020 13:42:47	20.51	0.20	
3/5/2020 13:43:02	20.52	0.24	
3/5/2020 13:43:17	20.45	0.19	
3/5/2020 13:43:32	20.50	0.24	
3/5/2020 13:43:47	20.44	0.19	
3/5/2020 13:44:02	20.45	0.19	
3/5/2020 13:44:17	20.45	0.20	
3/5/2020 13:44:32	20.42	0.19	
3/5/2020 13:44:47	20.41	0.18	
3/5/2020 13:45:02	20.50	0.21	
3/5/2020 13:45:17	20.49	0.21	
3/5/2020 13:45:32	20.44	0.18	
3/5/2020 13:45:47	20.45	0.20	
3/5/2020 13:46:02	20.46	0.22	
3/5/2020 13:46:17	20.52	0.24	
3/5/2020 13:46:32	20.52	0.24	
3/5/2020 13:46:47	20.51	0.22	
3/5/2020 13:47:02	20.52	0.20	
3/5/2020 13:47:17	20.30	0.08	
3/5/2020 13:47:32	20.50	0.39	
3/5/2020 13:47:47	20.48	0.18	
3/5/2020 13:48:02	20.52	0.23	
3/5/2020 13:48:17	20.47	0.18	
3/5/2020 13:48:32	20.38	0.13	
3/5/2020 13:48:47	20.51	0.37	
3/5/2020 13:49:02	20.48	0.19	
3/5/2020 13:49:17	20.52	0.24	
3/5/2020 13:49:32	20.48	0.20	
3/5/2020 13:49:47	20.55	0.25	
3/5/2020 13:50:02	20.62	0.27	
3/5/2020 13:50:17	20.48	0.20	
3/5/2020 13:50:32	20.47	0.20	
3/5/2020 13:50:47	20.52	0.23	
3/5/2020 13:51:02	20.48	0.20	
3/5/2020 13:51:17	20.53	0.24	
3/5/2020 13:51:52	20.54	0.20	
3/5/2020 13:51:47	20.48	0.19	
3/5/2020 13:52:02	20.52	0.23	
3/5/2020 13:52:17	20.52	0.32	
3/5/2020 13:52:32	20.61	0.34	
3/5/2020 13:52:47	20.53	0.34	
3/5/2020 13:53:02	20.52	0.24	
3/5/2020 13:33:17	20.62	0.30	
3/5/2020 13:53:32	20.46	0.19	
3/5/2020 13:53:47	20.56	0.25	
3/5/2020 13:54:02	20.60	0.24	
3/5/2020 13:54:17	20.48	0.20	
3/5/2020 13:54:32	20.48	0.22	
3/5/2020 13:54:47	20.60	0.27	End RA Test Run #5
3/5/2020 13:55:02	20.54	0.25	
3/5/2020 13:55:17	20.46	0.20	
3/5/2020 13:55:32	20.50	0.23	
3/5/2020 13:55:47	20.45	0.20	
3/5/2020 13:56:02	5.90	0.48	
3/5/2020 13:56:17	0.39	0.03	
3/5/2020 13:56:32	0.21	0.01	
3/5/2020 13:56:47	0.02	-0.05	
3/5/2020 13:57:02	0.01	-0.04	Post-test Bias and Drift Check:
3/5/2020 13:57:17	0.04	-0.04	zero nitrogen:
3/5/2020 13:57:32	0.03	-0.13	0.00 % v db Oxygen
3/5/2020 13:57:47	-0.06	-0.13	-0.08 % v db CO2
3/5/2020 13:58:02	0.01	-0.03	
3/5/2020 13:58:17	0.10	0.02	

15 sec avgs

RM FIELD DATA

Client Medline
Location Waukegan, IL
Source EO Control System
Date 3/5/2020

Date/Time	Common Stk Oxygen (% v db)	Common Stk CO2 (% v db)	Comments
3/5/2020 13:58:32	0.06	0.01	
3/5/2020 13:58:47	0.08	0.00	
3/5/2020 13:59:02	-0.09	-0.07	
3/5/2020 13:59:17	0.04	-0.01	
3/5/2020 13:59:32	0.01	-0.14	
3/5/2020 13:59:47	-0.09	-0.13	
3/5/2020 14:00:02	-0.07	-0.05	
3/5/2020 14:00:17	0.06	0.00	
3/5/2020 14:00:32	6.68	0.01	
3/5/2020 14:00:47	1.65	0.08	
3/5/2020 14:01:02	0.13	0.02	
3/5/2020 14:01:17	0.15	0.02	
3/5/2020 14:01:32	0.02	-0.03	
3/5/2020 14:01:47	0.04	0.04	
3/5/2020 14:02:02	0.04	0.00	
3/5/2020 14:02:17	-0.01	-0.04	
3/5/2020 14:02:32	0.07	0.01	
3/5/2020 14:02:47	-0.01	-0.05	
3/5/2020 14:03:02	9.39	0.12	
3/5/2020 14:03:17	20.00	0.21	
3/5/2020 14:03:32	17.01	7.69	
3/5/2020 14:03:47	21.97	21.51	
3/5/2020 14:04:02	22.12	22.28	
3/5/2020 14:04:17	21.12	21.34	**Post-test Bias and Drift Check:**
3/5/2020 14:04:32	20.83	21.20	**21.0% v db Oxygen:**
3/5/2020 14:04:47	20.74	21.17	**20.85 % v db Oxygen**
3/5/2020 14:05:02	20.99	21.36	
3/5/2020 14:05:17	20.83	21.21	
3/5/2020 14:05:32	20.87	21.28	
3/5/2020 14:05:47	20.95	21.33	
3/5/2020 14:06:02	19.67	7.31	
3/5/2020 14:06:17	2.29	1.29	**Post-test Bias and Drift Check:**
3/5/2020 14:06:32	2.45	2.46	**2.50% v db CO2:**
3/5/2020 14:06:47	2.54	2.57	**2.53 % v db CO2**
3/5/2020 14:07:02	2.51	2.42	
3/5/2020 14:07:17	2.54	2.67	
3/5/2020 14:07:32	2.49	2.52	
3/5/2020 14:07:47	2.41	2.40	
3/5/2020 14:08:02	2.54	2.56	
3/5/2020 14:08:17	1.11	0.97	
3/5/2020 14:08:32	0.20	0.21	
3/5/2020 14:08:47	0.02	0.02	
3/5/2020 14:09:02	0.07	0.17	
3/5/2020 14:09:17	7.82	0.11	
3/5/2020 14:09:32	19.71	0.30	
3/5/2020 14:09:47	20.29	0.31	
3/5/2020 14:10:02	20.36	0.31	
3/5/2020 14:10:17	20.37	0.29	
3/5/2020 14:10:32	20.37	0.24	
3/5/2020 14:10:47	20.30	0.22	
3/5/2020 14:11:02	20.33	0.22	
3/5/2020 14:11:17	20.48	0.27	
3/5/2020 14:11:32	20.44	0.29	
3/5/2020 14:11:47	20.41	0.20	
3/5/2020 14:12:02	20.40	0.21	
3/5/2020 14:12:17	20.42	0.07	
3/5/2020 14:12:32	20.43	0.12	
3/5/2020 14:12:47	20.42	0.21	
3/5/2020 14:13:02	20.42	0.10	
3/5/2020 14:13:17	20.36	0.22	
3/5/2020 14:13:32	20.44	0.28	
3/5/2020 14:13:47	20.46	0.24	
3/5/2020 14:14:02	20.39	0.21	
3/5/2020 14:14:17	20.51	0.27	
3/5/2020 14:14:32	20.58	0.32	
3/5/2020 14:14:47	20.43	0.21	
3/5/2020 14:15:02	20.46	0.42	
3/5/2020 14:15:17	20.38	0.20	
3/5/2020 14:15:32	20.46	0.23	
3/5/2020 14:15:47	20.46	0.22	
3/5/2020 14:16:02	20.47	0.22	
3/5/2020 14:16:17	20.33	0.17	
3/5/2020 14:16:32	20.48	0.24	
3/5/2020 14:16:47	20.48	0.18	
3/5/2020 14:17:02	20.45	0.20	
3/5/2020 14:17:17	20.46	0.20	
3/5/2020 14:17:32	20.46	0.15	
3/5/2020 14:17:47	20.38	0.09	
3/5/2020 14:18:02	20.30	0.10	
3/5/2020 14:18:17	20.45	0.21	
3/5/2020 14:18:32	20.49	0.23	
3/5/2020 14:18:47	20.46	0.18	
3/5/2020 14:19:02	20.46	0.20	

15 sec avgs

RM FIELD DATA

Client Medlina
Location Waukegan, IL
Source EO Control System
Date 3/5/2020

Date/Time	Common Stk Oxygan (% v db)	Common Stk CO2 (% v db)	Comments
3/5/2020 14:19:17	20.48	0.20	
3/5/2020 14:19:32	20.47	0.20	
3/5/2020 14:19:47	20.49	0.20	Begin RA Test Run #5
3/5/2020 14:20:02	20.40	0.17	
3/5/2020 14:20:17	20.53	0.23	
3/5/2020 14:20:32	20.53	0.24	
3/5/2020 14:20:47	20.52	0.24	
3/5/2020 14:21:02	20.69	0.33	
3/5/2020 14:21:17	20.46	0.19	
3/5/2020 14:21:32	20.40	0.18	
3/5/2020 14:21:47	20.56	0.24	
3/5/2020 14:22:02	20.70	0.33	
3/5/2020 14:22:17	20.51	0.20	
3/5/2020 14:22:32	20.54	0.23	
3/5/2020 14:22:47	20.50	0.19	
3/5/2020 14:23:02	20.54	0.24	
3/5/2020 14:23:17	20.53	0.22	
3/5/2020 14:23:32	20.52	0.20	
3/5/2020 14:23:47	20.46	0.18	
3/5/2020 14:24:02	20.50	0.09	
3/5/2020 14:24:17	20.53	0.40	
3/5/2020 14:24:32	20.39	0.15	
3/5/2020 14:24:47	20.51	0.17	
3/5/2020 14:25:02	20.57	0.26	
3/5/2020 14:25:17	20.52	0.17	
3/5/2020 14:25:32	20.41	0.19	
3/5/2020 14:25:47	20.33	0.36	
3/5/2020 14:26:02	20.49	0.19	
3/5/2020 14:26:17	20.58	0.24	
3/5/2020 14:26:32	20.66	0.32	
3/5/2020 14:26:47	20.50	0.18	
3/5/2020 14:27:02	20.50	0.19	
3/5/2020 14:27:17	20.39	0.19	
3/5/2020 14:27:32	20.56	0.24	
3/5/2020 14:27:47	20.53	0.23	
3/5/2020 14:28:02	20.53	0.23	
3/5/2020 14:28:17	20.62	0.34	
3/5/2020 14:28:32	20.56	0.23	
3/5/2020 14:28:47	20.59	0.24	
3/5/2020 14:29:02	20.46	0.18	
3/5/2020 14:29:17	20.39	0.18	
3/5/2020 14:29:32	20.53	0.35	
3/5/2020 14:29:47	20.49	0.20	
3/5/2020 14:30:02	20.53	0.23	
3/5/2020 14:30:17	20.48	0.19	
3/5/2020 14:30:32	20.55	0.24	
3/5/2020 14:30:47	20.61	0.25	
3/5/2020 14:31:02	20.48	0.20	
3/5/2020 14:31:17	20.52	0.22	
3/5/2020 14:31:32	20.48	0.20	
3/5/2020 14:31:47	20.52	0.23	
3/5/2020 14:32:02	20.50	0.21	
3/5/2020 14:32:17	20.47	0.20	
3/5/2020 14:32:32	20.53	0.24	
3/5/2020 14:32:47	20.47	0.19	
3/5/2020 14:33:02	20.52	0.33	
3/5/2020 14:33:17	20.40	0.20	
3/5/2020 14:33:32	20.52	0.21	
3/5/2020 14:33:47	20.53	0.26	
3/5/2020 14:34:02	20.47	0.20	
3/5/2020 14:34:17	20.51	0.23	
3/5/2020 14:34:32	20.49	0.24	
3/5/2020 14:34:47	20.45	0.19	
3/5/2020 14:35:02	20.51	0.23	
3/5/2020 14:35:17	20.47	0.19	
3/5/2020 14:35:32	20.51	0.24	
3/5/2020 14:35:47	20.48	0.20	
3/5/2020 14:36:02	20.54	0.24	
3/5/2020 14:36:17	20.51	0.32	
3/5/2020 14:36:32	20.52	0.21	
3/5/2020 14:36:47	20.50	0.22	
3/5/2020 14:37:02	20.46	0.17	
3/5/2020 14:37:17	20.46	0.19	
3/5/2020 14:37:32	20.47	0.19	
3/5/2020 14:37:47	20.45	0.18	
3/5/2020 14:38:02	20.55	0.26	
3/5/2020 14:38:17	20.45	0.20	
3/5/2020 14:38:32	20.47	0.09	
3/5/2020 14:38:47	20.48	0.20	
3/5/2020 14:39:02	20.46	0.19	
3/5/2020 14:39:17	20.42	0.18	
3/5/2020 14:39:32	20.43	0.18	
3/5/2020 14:39:47	20.43	0.19	

15 sec avgs

RM FIELD DATA

Client Medline
Location Waukegan, IL
Source EO Control System
Date 3/5/2020

Date/Time	Common Stk Oxygen (% v db)	Common Stk CO2 (% v db)	Comments
3/5/2020 14:40:02	20.45	0.20	
3/5/2020 14:40:17	20.50	0.23	
3/5/2020 14:40:32	20.46	0.21	
3/5/2020 14:40:47	20.55	0.25	
3/5/2020 14:41:02	20.69	0.34	
3/5/2020 14:41:17	20.49	0.17	
3/5/2020 14:41:32	20.47	0.20	
3/5/2020 14:41:47	20.55	0.23	
3/5/2020 14:42:02	20.49	0.17	
3/5/2020 14:42:17	20.50	0.26	
3/5/2020 14:42:32	20.47	0.16	
3/5/2020 14:42:47	20.46	0.21	
3/5/2020 14:43:02	20.51	0.35	
3/5/2020 14:43:17	20.47	0.19	
3/5/2020 14:43:32	20.48	0.26	
3/5/2020 14:43:47	20.51	0.24	
3/5/2020 14:44:02	20.50	0.36	
3/5/2020 14:44:17	20.51	0.23	
3/5/2020 14:44:32	20.49	0.26	
3/5/2020 14:44:47	20.39	0.19	
3/5/2020 14:45:02	20.47	0.21	
3/5/2020 14:45:17	20.54	0.24	
3/5/2020 14:45:32	20.51	0.37	
3/6/2020 14:45:47	20.47	0.20	
3/5/2020 14:46:02	20.51	0.40	
3/5/2020 14:46:17	20.48	0.09	
3/5/2020 14:46:32	20.50	0.26	
3/5/2020 14:46:47	20.49	0.19	
3/5/2020 14:47:02	20.54	0.23	
3/5/2020 14:47:17	20.50	0.22	
3/5/2020 14:47:32	20.48	0.19	
3/5/2020 14:47:47	20.38	0.10	
3/5/2020 14:48:02	20.53	0.23	
3/5/2020 14:48:17	20.46	0.17	
3/5/2020 14:48:32	20.39	0.11	
3/5/2020 14:48:47	20.39	0.16	
3/5/2020 14:49:02	20.32	0.07	
3/5/2020 14:49:17	20.38	0.09	
3/5/2020 14:49:32	20.54	0.24	
3/5/2020 14:49:47	20.45	0.18	End RA Test Run #6
3/5/2020 14:50:02	20.49	0.25	
3/5/2020 14:50:17	18.91	0.43	
3/5/2020 14:50:32	9.14	0.16	
3/5/2020 14:50:47	0.53	0.01	
3/5/2020 14:51:02	0.13	-0.03	
3/5/2020 14:51:17	-0.11	-0.15	
3/5/2020 14:51:32	0.22	0.10	
3/5/2020 14:51:47	-0.06	-0.13	
3/5/2020 14:52:02	0.04	-0.07	
3/5/2020 14:52:17	0.03	-0.01	
3/5/2020 14:52:32	2.87	0.03	
3/5/2020 14:52:47	4.30	0.52	
3/5/2020 14:53:02	0.19	-0.01	
3/5/2020 14:53:17	-0.06	-0.06	
3/5/2020 14:53:32	0.10	0.01	
3/5/2020 14:53:47	0.17	0.10	
3/5/2020 14:54:02	-0.09	-0.14	
3/5/2020 14:54:17	6.91	0.13	
3/5/2020 14:54:32	0.29	-0.13	
3/5/2020 14:54:47	0.10	0.02	Post-test Bias and Drift Check:
3/5/2020 14:55:02	0.03	0.02	zero nitrogen:
3/5/2020 14:55:17	0.01	-0.13	-0.02 % v db Oxygen
3/5/2020 14:55:32	0.01	-0.15	-0.11 % v db CO2
3/5/2020 14:55:47	-0.14	-0.16	
3/5/2020 14:56:02	0.02	-0.03	
3/5/2020 14:56:17	0.07	0.01	
3/5/2020 14:56:32	0.06	-0.01	
3/5/2020 14:56:47	16.37	7.51	
3/5/2020 14:57:02	21.84	21.14	
3/5/2020 14:57:17	22.15	22.35	
3/5/2020 14:57:32	21.22	21.45	Post-test Bias and Drift Check:
3/5/2020 14:57:47	20.91	21.30	21.0% v db Oxygen:
3/5/2020 14:58:02	20.88	21.42	20.89 % v db Oxygen
3/5/2020 14:58:17	20.92	21.19	
3/5/2020 14:58:32	20.85	21.25	
3/5/2020 14:58:47	20.96	21.28	
3/5/2020 14:59:02	20.74	21.22	
3/5/2020 14:59:17	20.70	9.71	
3/5/2020 14:59:32	4.83	2.12	
3/5/2020 14:59:47	2.40	2.35	Post-test Bias and Drift Check:
3/5/2020 15:00:02	2.54	2.55	2.50% v db CO2:
3/5/2020 15:00:17	2.64	2.64	2.55 % v db CO2
3/5/2020 15:00:32	2.48	2.52	

15 sec avgs

RM FIELD DATA

Client Medline
Location Waukegan, IL
Source EO Control System
Date 3/5/2020

Date/Time	Common Stk Oxygen (% v db)	Common Stk CO2 (% v db)	Comments
3/5/2020 15:00:47	2.44	2.51	
3/5/2020 15:01:02	2.55	2.55	
3/5/2020 15:01:17	2.49	2.51	
3/5/2020 15:01:32	2.53	2.57	
3/5/2020 15:01:47	2.52	2.48	
3/5/2020 15:02:02	2.47	2.52	
3/5/2020 15:02:17	2.73	2.52	
3/5/2020 15:02:32	18.51	0.50	
3/5/2020 15:02:47	20.30	0.26	
3/5/2020 15:03:02	20.45	0.26	
3/5/2020 15:03:17	20.43	0.07	
3/5/2020 15:03:32	20.47	0.26	
3/5/2020 15:03:47	20.44	0.22	
3/5/2020 15:04:02	20.48	0.25	
3/5/2020 15:04:17	20.45	0.20	
3/5/2020 15:04:32	20.52	0.25	
3/5/2020 15:04:47	20.52	0.26	
3/5/2020 15:05:02	20.45	0.20	
3/5/2020 15:05:17	20.49	0.25	
3/5/2020 15:05:32	20.44	0.20	
3/5/2020 15:05:47	20.35	0.19	
3/5/2020 15:06:02	20.49	0.25	
3/5/2020 15:06:17	20.49	0.23	
3/5/2020 15:06:32	20.47	0.20	
3/5/2020 15:06:47	20.51	0.24	
3/5/2020 15:07:02	20.47	0.02	
3/5/2020 15:07:17	20.50	0.37	
3/5/2020 15:07:32	20.47	0.18	
3/5/2020 15:07:47	20.51	0.36	
3/5/2020 15:08:02	20.47	0.21	
3/5/2020 15:08:17	20.44	0.17	
3/5/2020 15:08:32	20.53	0.24	
3/5/2020 15:08:47	20.44	0.20	
3/5/2020 15:09:02	20.50	0.24	
3/5/2020 15:09:17	20.46	0.20	
3/5/2020 15:09:32	20.51	0.24	
3/5/2020 15:09:47	20.45	0.20	
3/5/2020 15:10:02	20.51	0.26	
3/5/2020 15:10:17	20.50	0.25	
3/5/2020 15:10:32	20.61	0.31	
3/5/2020 15:10:47	20.50	0.36	
3/5/2020 15:11:02	20.51	0.24	
3/5/2020 15:11:17	20.50	0.32	
3/5/2020 15:11:32	20.54	0.22	
3/5/2020 15:11:47	20.45	0.20	Begin RA Test Run #7
3/5/2020 15:12:02	20.47	0.23	
3/5/2020 15:12:17	20.51	0.24	
3/5/2020 15:12:32	20.43	0.23	
3/5/2020 15:12:47	20.57	0.32	
3/5/2020 15:13:02	20.48	0.23	
3/5/2020 15:13:17	20.45	0.18	
3/5/2020 15:13:32	20.48	0.20	
3/5/2020 15:13:47	20.50	0.25	
3/5/2020 15:14:02	20.51	0.23	
3/5/2020 15:14:17	20.51	0.24	
3/5/2020 15:14:32	20.51	0.24	
3/5/2020 15:14:47	20.51	0.23	
3/5/2020 15:15:02	20.62	0.34	
3/3/2020 15:15:17	20.44	0.19	
3/5/2020 15:15:32	20.53	0.23	
3/5/2020 15:15:47	20.47	0.20	
3/5/2020 15:16:02	20.61	0.30	
3/5/2020 15:16:17	20.40	0.19	
3/5/2020 15:16:32	20.62	0.29	
3/5/2020 15:16:47	20.48	0.20	
3/5/2020 15:17:02	20.56	0.26	
3/5/2020 15:17:17	20.61	0.25	
3/5/2020 15:17:32	20.49	0.20	
3/5/2020 15:17:47	20.48	0.22	
3/5/2020 15:18:02	20.53	0.23	
3/5/2020 15:18:17	20.51	0.23	
3/5/2020 15:18:32	20.60	0.32	
3/5/2020 15:18:47	20.44	0.19	
3/5/2020 15:19:02	20.47	0.19	
3/5/2020 15:19:17	20.51	0.25	
3/5/2020 15:19:32	20.51	0.35	
3/5/2020 15:19:47	20.44	0.17	
3/5/2020 15:20:02	20.48	0.20	
3/5/2020 15:20:17	20.41	0.19	
3/5/2020 15:20:32	20.54	0.24	
3/5/2020 15:20:47	20.60	0.27	
3/5/2020 15:21:02	20.39	0.17	
3/5/2020 15:21:17	20.64	0.33	

15 sec avgs

RM FIELD DATA

Client Medline
Location Waukegan, IL
Source EO Control System
Date 3/5/2020

Date/Time	Common Stk Oxygen (% v db)	Common Stk CO2 (% v db)	Comments
3/5/2020 15:21:32	20.45	0.18	
3/5/2020 15:21:47	20.48	0.20	
3/5/2020 15:22:02	20.41	0.14	
3/5/2020 15:22:17	20.51	0.35	
3/5/2020 15:22:32	20.43	0.19	
3/5/2020 15:22:47	20.45	0.18	
3/5/2020 15:23:02	20.53	0.23	
3/5/2020 15:23:17	20.47	0.20	
3/5/2020 15:23:32	20.51	0.23	
3/5/2020 15:23:47	20.47	0.20	
3/5/2020 15:24:02	20.50	0.25	
3/5/2020 15:24:17	20.51	0.23	
3/5/2020 15:24:32	20.52	0.21	
3/5/2020 15:24:47	20.48	0.19	
3/5/2020 15:25:02	20.54	0.22	
3/5/2020 15:25:17	20.60	0.25	
3/5/2020 15:25:32	20.46	0.18	
3/5/2020 15:25:47	20.40	0.16	
3/5/2020 15:26:02	20.61	0.31	
3/5/2020 15:26:17	20.38	0.11	
3/5/2020 15:26:32	20.51	0.23	
3/5/2020 15:26:47	20.50	0.17	
3/5/2020 15:27:02	20.46	0.19	
3/5/2020 15:27:17	20.48	0.19	
3/5/2020 15:27:32	20.48	0.20	
3/5/2020 15:27:47	20.49	0.20	
3/5/2020 15:28:02	20.37	0.08	
3/5/2020 15:28:17	20.52	0.25	
3/5/2020 15:28:32	20.54	0.23	
3/5/2020 15:28:47	20.65	0.32	
3/5/2020 15:29:02	20.47	0.18	
3/5/2020 15:29:17	20.50	0.20	
3/5/2020 15:29:32	20.50	0.13	
3/5/2020 15:29:47	20.42	0.18	
3/5/2020 15:30:02	20.55	0.24	
3/5/2020 15:30:17	20.47	0.18	
3/5/2020 15:30:32	20.52	0.20	
3/5/2020 15:30:47	20.63	0.23	
3/5/2020 15:31:02	20.47	0.21	
3/5/2020 15:31:17	20.66	0.28	
3/5/2020 15:31:32	20.44	0.08	
3/5/2020 15:31:47	20.55	0.23	
3/5/2020 15:32:02	20.49	0.19	
3/5/2020 15:32:17	20.52	0.24	
3/5/2020 15:32:32	20.54	0.38	
3/5/2020 15:32:47	20.50	0.19	
3/5/2020 15:33:02	20.50	0.21	
3/5/2020 15:33:17	20.57	0.24	
3/5/2020 15:33:32	20.55	0.24	
3/5/2020 15:33:47	20.55	0.33	
3/5/2020 15:34:02	20.50	0.18	
3/5/2020 15:34:17	20.51	0.20	
3/5/2020 15:34:32	20.59	0.25	
3/5/2020 15:34:47	20.55	0.22	
3/5/2020 15:35:02	20.51	0.20	
3/5/2020 15:35:17	20.55	0.23	
3/5/2020 15:35:32	20.52	0.19	
3/5/2020 15:35:47	20.66	0.35	
3/5/2020 15:36:02	20.52	0.12	
3/5/2020 15:36:17	20.56	0.21	
3/5/2020 15:36:32	20.49	0.19	
3/5/2020 15:56:47	20.56	0.26	
3/5/2020 15:37:02	20.71	0.33	
3/5/2020 15:37:17	20.43	0.18	
3/5/2020 15:37:32	20.48	0.21	
3/5/2020 15:37:47	20.55	0.23	
3/5/2020 15:38:02	20.43	0.17	
3/5/2020 15:38:17	20.43	0.10	
3/5/2020 15:38:32	20.60	0.25	
3/5/2020 15:38:47	20.59	0.25	
3/5/2020 15:59:02	20.65	0.26	
3/5/2020 15:39:17	20.50	0.22	
3/5/2020 15:39:32	20.57	0.26	
3/5/2020 15:39:47	20.55	0.23	
3/5/2020 15:40:02	20.53	0.20	
3/5/2020 15:40:17	20.58	0.23	
3/5/2020 15:40:32	20.52	0.19	
3/5/2020 15:40:47	20.53	0.25	
3/5/2020 15:41:02	20.56	0.22	
3/5/2020 15:41:17	20.55	0.16	
3/5/2020 15:41:32	20.52	0.06	
3/5/2020 15:41:47	20.55	0.26	End RA Test Run #7
3/5/2020 15:42:02	20.59	0.24	

15 sec avgs

RM FIELD DATA

Client Medline
Location Weukegan, IL
Source EO Control System
Date 3/5/2020

Date/Time	Common Stk Oxygen (% v db)	Common Stk CO2 (% v db)	Comments
3/5/2020 15:42:17	20.56	0.23	
3/5/2020 15:42:32	20.57	0.33	
3/5/2020 15:42:47	20.52	0.19	
3/5/2020 15:43:02	20.66	0.32	
3/5/2020 15:43:17	20.36	0.09	
3/5/2020 15:43:32	20.17	0.30	
3/5/2020 15:43:47	2.44	0.29	
3/5/2020 15:44:02	0.22	0.01	
3/5/2020 15:44:17	0.08	-0.03	
3/5/2020 15:44:32	0.12	0.01	Post-test Bias and Drift Check:
3/5/2020 15:44:47	0.00	-0.05	zero nitrogen:
3/5/2020 15:45:02	0.07	0.03	0.04 % v db Oxygen
3/5/2020 15:45:17	0.07	-0.03	-0.02 % v db CO2
3/5/2020 15:45:32	0.02	-0.04	
3/5/2020 15:45:47	0.05	0.02	
3/5/2020 15:46:02	0.05	-0.01	
3/5/2020 15:46:17	0.04	-0.06	
3/5/2020 15:46:32	0.01	-0.04	
3/5/2020 15:46:47	11.85	0.03	
3/5/2020 15:47:02	2.50	0.27	
3/5/2020 15:47:17	0.18	0.02	
3/5/2020 15:47:32	0.07	0.01	
3/5/2020 15:47:47	0.03	-0.04	
3/5/2020 15:48:02	0.05	-0.01	
3/5/2020 15:48:17	0.01	-0.03	
3/5/2020 15:48:32	0.08	0.00	
3/5/2020 15:48:47	5.34	0.35	
3/5/2020 15:49:02	20.25	20.08	
3/5/2020 15:49:17	21.36	21.43	Post-test Bias and Drift Check:
3/5/2020 15:49:32	20.94	21.25	21.0% v db Oxygen:
3/5/2020 15:49:47	20.90	21.26	20.93 % v db Oxygen
3/5/2020 15:50:02	20.89	21.38	
3/5/2020 15:50:17	20.99	21.40	
3/5/2020 15:50:32	20.99	21.31	
3/5/2020 15:50:47	20.83	21.24	
3/5/2020 15:51:02	20.85	21.27	
3/5/2020 15:51:17	20.88	21.47	
3/5/2020 15:51:32	20.83	21.26	
3/5/2020 15:51:47	20.78	21.29	
3/5/2020 15:52:02	20.97	21.34	
3/5/2020 15:52:17	15.96	15.68	
3/5/2020 15:52:32	3.13	3.22	
3/5/2020 15:52:47	2.58	2.68	
3/5/2020 15:53:02	2.58	2.61	
3/5/2020 15:53:17	2.62	2.60	Post-test Bias and Drift Check:
3/5/2020 15:53:32	2.52	2.54	2.50% v db CO2:
3/5/2020 15:53:47	2.57	2.57	2.55 % v db CO2
3/5/2020 15:54:02	2.63	2.58	
3/5/2020 15:54:17	2.49	2.51	
3/5/2020 15:54:32	2.52	2.42	
3/5/2020 15:54:47	2.55	2.59	
3/5/2020 15:55:02	2.55	2.55	
3/5/2020 15:55:17	2.51	2.51	
3/5/2020 15:55:32	2.55	2.55	
3/5/2020 15:55:47	2.51	2.51	
3/5/2020 15:56:02	2.55	2.56	
3/5/2020 15:56:17	2.55	2.54	
3/5/2020 15:56:32	2.64	2.60	
3/5/2020 15:56:47	2.51	2.50	
3/5/2020 15:57:02	2.54	2.54	
3/5/2020 15:57:17	2.51	2.51	
3/5/2020 15:57:32	16.88	0.67	
3/5/2020 15:57:47	20.30	0.24	
3/5/2020 15:58:02	20.53	0.28	
3/5/2020 15:58:17	20.47	0.23	
3/5/2020 15:58:32	20.62	0.29	
3/5/2020 15:58:47	20.55	0.28	
3/5/2020 15:59:02	20.52	0.25	
3/5/2020 15:59:17	20.50	0.21	
3/5/2020 15:59:32	20.53	0.24	
3/5/2020 15:59:47	20.41	0.11	
3/5/2020 16:00:02	20.53	0.24	
3/5/2020 16:00:17	20.51	0.18	
3/5/2020 16:00:32	20.50	0.21	
3/5/2020 16:00:47	20.59	0.27	
3/5/2020 16:01:02	20.54	0.23	
3/5/2020 16:01:17	20.45	0.19	
3/5/2020 16:01:32	20.56	0.34	
3/5/2020 16:01:47	20.48	0.19	
3/5/2020 16:02:02	20.48	0.18	
3/5/2020 16:02:17	20.48	0.19	
3/5/2020 16:02:32	20.51	0.20	
3/5/2020 16:02:47	20.59	0.25	

15 sec avgs

RM FIELD DATA

Client Medline
Location Waukegan, IL
Source EO Control System
Date 3/5/2020

Date/Time	Common Stk Oxygen (% v db)	Common Stk CO2 (% v db)	Comments
3/5/2020 16:03:02	20.55	0.18	
3/5/2020 16:03:17	20.45	0.20	
3/5/2020 16:03:32	20.66	0.31	
3/5/2020 16:03:47	20.51	0.20	
3/5/2020 16:04:02	20.42	0.13	
3/5/2020 16:04:17	20.58	0.24	
3/5/2020 16:04:32	20.63	0.23	
3/5/2020 16:04:47	20.36	0.10	
3/5/2020 16:05:02	20.56	0.23	
3/5/2020 16:05:17	20.50	0.19	
3/5/2020 16:05:32	20.50	0.20	
3/5/2020 16:05:47	20.57	0.25	
3/5/2020 16:06:02	20.51	0.19	
3/5/2020 16:06:17	20.56	0.26	
3/5/2020 16:06:32	20.64	0.25	
3/5/2020 16:06:47	20.53	0.20	
3/5/2020 16:07:02	20.44	0.19	
3/5/2020 16:07:17	20.58	0.24	
3/5/2020 16:07:32	20.53	0.17	
3/5/2020 16:07:47	20.44	0.18	
3/5/2020 16:08:02	20.56	0.24	
3/5/2020 16:08:17	20.59	0.22	
3/5/2020 16:08:32	20.53	0.20	
3/5/2020 16:08:47	20.58	0.24	Begin RA Test Run #8
3/5/2020 16:09:02	20.66	0.34	
3/5/2020 16:09:17	20.55	0.17	
3/5/2020 16:09:32	20.53	0.19	
3/5/2020 16:09:47	20.53	0.20	
3/5/2020 16:10:02	20.53	0.17	
3/5/2020 16:10:17	20.44	0.15	
3/5/2020 16:10:32	20.59	0.24	
3/5/2020 16:10:47	20.67	0.32	
3/5/2020 16:11:02	20.51	0.18	
3/5/2020 16:11:17	20.52	0.17	
3/5/2020 16:11:32	20.52	0.20	
3/5/2020 16:11:47	20.49	0.19	
3/5/2020 16:12:02	20.52	0.20	
3/5/2020 18:12:17	20.41	0.17	
3/5/2020 16:12:32	20.63	0.34	
3/5/2020 16:12:47	20.42	0.17	
3/5/2020 16:13:02	20.64	0.25	
3/5/2020 16:13:17	20.52	0.20	
3/5/2020 16:13:52	20.54	0.21	
3/5/2020 16:13:47	20.57	0.24	
3/5/2020 16:14:02	20.56	0.23	
3/5/2020 16:14:17	20.64	0.23	
3/5/2020 16:14:32	20.50	0.18	
3/5/2020 16:14:47	20.51	0.19	
3/5/2020 16:15:02	20.52	0.19	
3/5/2020 16:15:17	20.41	0.18	
3/5/2020 16:15:32	20.56	0.40	
3/5/2020 16:15:47	20.43	0.10	
3/5/2020 16:16:02	20.54	0.21	
3/5/2020 16:16:17	20.53	0.22	
3/5/2020 16:16:32	20.59	0.23	
3/5/2020 16:16:47	20.51	0.24	
3/5/2020 16:17:02	20.54	0.23	
3/5/2020 16:17:17	20.50	0.10	
3/5/2020 16:17:32	20.42	0.14	
3/5/2020 16:17:47	20.52	0.19	
3/5/2020 16:18:02	20.52	0.20	
3/5/2020 16:18:17	20.53	0.20	
3/5/2020 16:18:32	20.45	0.19	
3/5/2020 16:18:47	20.57	0.23	
3/5/2020 16:19:02	20.66	0.32	
3/5/2020 16:19:17	20.43	0.17	
3/5/2020 16:19:32	20.53	0.20	
3/5/2020 16:18:47	20.60	0.26	
3/5/2020 16:20:02	20.54	0.17	
3/5/2020 16:20:17	20.56	0.27	
3/5/2020 16:20:32	20.54	0.16	
3/5/2020 16:20:47	20.43	0.19	
3/5/2020 16:21:02	20.56	0.23	
3/5/2020 16:21:17	20.52	0.20	
3/5/2020 16:21:32	20.58	0.24	
3/5/2020 16:21:47	20.55	0.17	
3/5/2020 16:22:02	20.42	0.16	
3/5/2020 16:22:17	20.68	0.34	
3/5/2020 16:22:32	20.53	0.20	
3/5/2020 16:22:47	20.51	0.22	
3/5/2020 16:23:02	20.57	0.24	
3/5/2020 16:23:17	20.58	0.22	
3/5/2020 16:23:32	20.54	0.19	

15 sec avgs

RM FIELD DATA

Client Medline
Location Waukegan, IL
Source EO Control System
Date 3/5/2020

Date/Time	Common Stk Oxygen (% v db)	Common Stk CO2 (% v db)	Comments
3/5/2020 16:23:47	20.58	0.24	
3/5/2020 16:24:02	20.71	0.34	
3/5/2020 16:24:17	20.50	0.19	
3/5/2020 16:24:32	20.59	0.24	
3/5/2020 16:24:47	20.53	0.20	
3/5/2020 16:25:02	20.56	0.33	
3/5/2020 16:25:17	20.44	0.10	
3/5/2020 16:25:32	20.54	0.18	
3/5/2020 16:25:47	20.58	0.24	
3/5/2020 16:26:02	20.52	0.10	
3/5/2020 16:26:17	20.48	0.19	
3/5/2020 16:26:32	20.56	0.23	
3/5/2020 16:26:47	20.52	0.23	
3/6/2020 16:27:02	20.50	0.19	
3/5/2020 16:27:17	20.56	0.23	
3/5/2020 16:27:32	20.53	0.19	
3/5/2020 16:27:47	20.57	0.24	
3/5/2020 16:28:02	20.54	0.19	
3/5/2020 16:28:17	20.54	0.20	
3/5/2020 16:28:32	20.56	0.22	
3/5/2020 16:28:47	20.46	0.20	
3/5/2020 16:29:02	20.56	0.23	
3/5/2020 16:29:17	20.63	0.24	
3/5/2020 16:29:32	20.51	0.20	
3/5/2020 16:29:47	20.45	0.21	
3/5/2020 16:30:02	20.55	0.22	
3/5/2020 16:30:17	20.49	0.19	
3/5/2020 16:30:32	20.60	0.28	
3/5/2020 16:30:47	20.51	0.19	
3/5/2020 16:31:02	20.56	0.24	
3/5/2020 16:31:17	20.53	0.20	
3/5/2020 16:31:32	20.57	0.23	
3/5/2020 16:31:47	20.54	0.02	
3/5/2020 16:32:02	20.67	0.29	
3/5/2020 16:32:17	20.55	0.27	
3/5/2020 16:32:32	20.52	0.18	
3/5/2020 16:32:47	20.53	0.21	
3/5/2020 16:33:02	20.54	0.18	
3/5/2020 16:33:17	20.60	0.25	
3/5/2020 16:33:32	20.52	0.21	
3/5/2020 16:33:47	20.56	0.24	
3/5/2020 16:34:02	20.52	0.20	
3/5/2020 16:34:17	20.58	0.24	
3/5/2020 16:34:32	20.55	0.18	
3/5/2020 16:34:47	20.52	0.19	
3/5/2020 16:35:02	20.56	0.26	
3/5/2020 16:35:17	20.55	0.32	
3/5/2020 16:35:32	20.52	0.20	
3/5/2020 16:35:47	20.56	0.24	
3/5/2020 16:36:02	20.50	0.19	
3/5/2020 16:36:17	20.49	0.20	
3/5/2020 16:36:32	20.64	0.31	
3/5/2020 16:36:47	20.42	0.14	
3/6/2020 16:37:02	20.63	0.24	
3/5/2020 16:37:17	20.59	0.25	
3/5/2020 16:37:32	20.51	0.19	
3/5/2020 16:37:47	20.56	0.24	
3/5/2020 16:38:02	20.51	0.20	
3/5/2020 16:38:17	20.53	0.25	
3/5/2020 16:38:32	20.53	0.17	
3/5/2020 16:38:47	20.55	0.27	End RA Test Run #8
3/5/2020 16:39:02	20.64	0.27	
3/5/2020 16:39:17	20.49	0.20	
3/5/2020 16:39:32	20.41	0.13	
3/5/2020 16:39:47	20.57	0.24	
3/5/2020 16:40:02	20.63	0.26	
3/5/2020 16:40:17	12.68	0.73	
3/5/2020 16:40:32	0.72	0.03	
3/5/2020 16:40:47	0.17	0.02	
3/5/2020 16:41:02	0.10	0.01	
3/5/2020 16:41:17	0.12	0.02	
3/5/2020 16:41:32	0.06	0.02	
3/5/2020 16:41:47	0.03	-0.02	
3/5/2020 16:42:02	0.06	0.03	
3/5/2020 16:42:17	0.09	0.01	
3/5/2020 16:42:32	0.06	-0.01	
3/5/2020 16:42:47	2.35	0.13	
3/5/2020 16:43:02	3.52	0.35	
3/5/2020 16:43:17	0.22	0.03	Post-test Bias and Drift Check:
3/5/2020 16:43:32	0.03	-0.03	zero nitrogen:
3/5/2020 16:43:47	0.07	0.01	0.04 % v db Oxygen
3/5/2020 16:44:02	0.04	-0.05	-0.03 % v db CO2
3/5/2020 16:44:17	0.01	-0.04	

15 sec avgs

RM FIELD DATA

Client Medline
Location Waukagan, IL
Source EO Control System
Date 3/5/2020

Date/Time	Common Stk Oxygen (% v db)	Common Stk CO2 (% v db)	Comments
3/5/2020 16:44:32	0.02	0.01	
3/5/2020 16:44:47	1.87	0.11	
3/5/2020 16:45:02	18.92	0.18	
3/5/2020 16:45:17	20.14	0.11	
3/5/2020 16:45:32	20.24	0.10	
3/5/2020 16:45:47	20.39	0.04	
3/5/2020 16:46:02	20.31	0.11	
3/5/2020 16:46:17	18.14	9.10	Post-test Bias and Drift Check:
3/5/2020 16:46:32	21.04	20.82	21.0% v db Oxygen:
3/5/2020 16:46:47	21.00	21.22	20.97 % v db Oxygen
3/5/2020 16:47:02	20.93	21.20	
3/5/2020 16:47:17	20.92	21.31	
3/5/2020 16:47:32	20.86	21.25	
3/5/2020 16:47:47	20.91	21.30	
3/5/2020 16:48:02	20.81	21.22	
3/5/2020 16:48:17	3.97	3.93	
3/5/2020 16:48:32	2.63	2.68	
3/5/2020 16:48:47	2.73	2.71	
3/5/2020 16:49:02	2.65	2.58	Post-test Bias and Drift Check:
3/5/2020 16:49:17	2.52	2.53	2.50% v db CO2:
3/5/2020 16:49:32	2.55	2.56	2.56 % v db CO2
3/5/2020 16:49:47	2.52	2.52	
3/5/2020 16:50:02	2.55	2.64	
3/5/2020 16:50:17	2.42	2.42	
3/5/2020 16:50:32	2.59	2.54	
3/5/2020 16:50:47	0.59	0.58	
3/5/2020 16:51:02	0.11	0.23	
3/5/2020 16:51:17	10.26	0.16	
3/5/2020 16:51:32	19.83	0.24	
3/5/2020 16:51:47	20.32	0.38	
3/5/2020 16:52:02	20.28	0.23	
3/5/2020 16:52:17	20.34	0.26	
3/5/2020 16:52:32	20.32	0.22	
3/5/2020 16:52:47	20.36	0.37	
3/5/2020 16:53:02	20.33	0.22	
3/5/2020 16:53:17	20.31	0.23	
3/5/2020 16:53:32	20.42	0.28	
3/5/2020 16:53:47	20.41	0.26	
3/5/2020 16:54:02	20.43	0.27	
3/5/2020 16:54:17	20.40	0.26	
3/5/2020 16:54:32	20.35	0.21	
3/5/2020 16:54:47	20.40	0.25	
3/5/2020 16:55:02	20.20	0.11	
3/5/2020 16:55:17	20.42	0.24	
3/5/2020 16:55:32	20.45	0.27	
3/5/2020 16:55:47	20.37	0.21	
3/5/2020 16:56:02	20.49	0.28	
3/5/2020 16:56:17	20.44	0.25	
3/5/2020 16:56:32	20.30	0.12	
3/5/2020 16:56:47	20.37	0.21	
3/5/2020 16:57:02	20.52	0.34	
3/5/2020 16:57:17	20.42	0.27	
3/5/2020 16:57:32	20.38	0.21	
3/5/2020 16:57:47	20.49	0.25	
3/5/2020 16:58:02	20.43	0.24	
3/5/2020 16:58:17	20.39	0.21	
3/5/2020 16:58:32	20.52	0.34	
3/5/2020 16:58:47	20.32	0.19	
3/5/2020 16:59:02	20.40	0.16	
3/5/2020 16:59:17	20.49	0.27	
3/5/2020 16:59:32	20.57	0.24	
3/5/2020 16:59:47	20.51	0.09	
3/5/2020 17:00:02	20.50	0.24	
3/5/2020 17:00:17	20.59	0.26	
3/5/2020 17:00:32	20.55	0.23	
3/5/2020 17:00:47	20.49	0.17	
3/5/2020 17:01:02	20.52	0.26	
3/5/2020 17:01:17	20.54	0.35	
3/5/2020 17:01:32	20.50	0.17	
3/5/2020 17:01:47	20.49	0.20	
3/5/2020 17:02:02	20.50	0.21	
3/5/2020 17:02:17	20.51	0.04	
3/5/2020 17:02:32	20.58	0.26	
3/5/2020 17:02:47	20.62	0.25	
3/5/2020 17:03:02	20.51	0.21	
3/5/2020 17:03:17	20.57	0.24	
3/5/2020 17:03:32	20.54	0.17	
3/5/2020 17:03:47	20.42	0.18	
3/5/2020 17:04:02	20.65	0.23	
3/5/2020 17:04:17	20.53	0.21	
3/5/2020 17:04:32	20.56	0.21	
3/5/2020 17:04:47	20.45	0.19	
3/5/2020 17:05:02	20.65	0.26	

15 sec avgs

RM FIELD DATA

Client Medline
Location Waukegan, IL
Source EO Control System
Date 3/5/2020

Date/Time	Common Stk Oxygen (% v db)	Common Stk CO2 (% v db)	Comments
3/5/2020 17:05:17	20.45	0.19	
3/5/2020 17:05:32	20.52	0.18	
3/5/2020 17:05:47	20.59	0.26	
3/5/2020 17:06:02	20.49	0.20	
3/5/2020 17:06:17	20.55	0.28	
3/5/2020 17:06:32	20.54	0.26	
3/5/2020 17:06:47	20.52	0.21	
3/5/2020 17:07:02	20.63	0.24	
3/5/2020 17:07:17	20.57	0.24	
3/5/2020 17:07:32	20.52	0.20	
3/5/2020 17:07:47	20.56	0.35	Begin RA Test Run #9
3/5/2020 17:08:02	20.52	0.10	
3/5/2020 17:08:17	20.53	0.23	
3/5/2020 17:08:32	20.56	0.25	
3/5/2020 17:08:47	20.49	0.20	
3/5/2020 17:09:02	20.54	0.18	
3/5/2020 17:09:17	20.60	0.26	
3/5/2020 17:09:32	20.53	0.19	
3/5/2020 17:09:47	20.57	0.23	
3/5/2020 17:10:02	20.53	0.11	
5/5/2020 17:10:17	20.67	0.33	
3/5/2020 17:10:32	20.44	0.10	
3/5/2020 17:10:47	20.57	0.33	
3/5/2020 17:11:02	20.53	0.21	
3/5/2020 17:11:17	20.56	0.22	
3/5/2020 17:11:32	20.43	0.12	
3/5/2020 17:11:47	20.50	0.19	
3/5/2020 17:12:02	20.70	0.35	
3/5/2020 17:12:17	20.54	0.22	
3/5/2020 17:12:32	20.51	0.20	
3/5/2020 17:12:47	20.57	0.24	
3/5/2020 17:13:02	20.52	0.20	
3/5/2020 17:13:17	20.54	0.21	
3/5/2020 17:13:32	20.57	0.28	
3/5/2020 17:13:47	20.53	0.20	
3/5/2020 17:14:02	20.59	0.25	
3/5/2020 17:14:17	20.71	0.34	
3/5/2020 17:14:32	20.54	0.17	
3/5/2020 17:14:47	20.52	0.20	
3/5/2020 17:15:02	20.40	0.10	
3/5/2020 17:15:17	20.57	0.24	
3/5/2020 17:15:32	20.49	0.19	
3/5/2020 17:15:47	20.61	0.26	
3/5/2020 17:16:02	20.52	0.19	
3/5/2020 17:16:17	20.56	0.34	
3/5/2020 17:16:32	20.54	0.26	
3/5/2020 17:16:47	20.53	0.21	
3/5/2020 17:17:02	20.63	0.34	
3/5/2020 17:17:17	20.45	0.20	
3/5/2020 17:17:32	20.68	0.31	
3/5/2020 17:17:47	20.54	0.02	
3/5/2020 17:18:02	20.61	0.23	
3/5/2020 17:18:17	20.57	0.24	
3/5/2020 17:18:32	20.66	0.31	
3/5/2020 17:18:47	20.51	0.18	
3/5/2020 17:19:02	20.55	0.18	
3/5/2020 17:19:17	20.60	0.23	
3/5/2020 17:19:32	20.67	0.30	
3/5/2020 17:19:47	20.63	0.25	
3/5/2020 17:20:02	20.55	0.18	
3/5/2020 17:20:17	20.51	0.19	
3/5/2020 17:20:32	20.53	0.21	
3/5/2020 17:20:47	20.53	0.07	
3/5/2020 17:21:02	20.43	0.18	
3/5/2020 17:21:17	20.58	0.24	
3/5/2020 17:21:32	20.65	0.31	
3/5/2020 17:21:47	20.51	0.20	
3/5/2020 17:22:02	20.53	0.20	
3/5/2020 17:22:17	20.54	0.11	
3/5/2020 17:22:32	20.45	0.12	
3/5/2020 17:22:47	20.44	0.10	
3/5/2020 17:23:02	20.54	0.12	
3/5/2020 17:23:17	20.53	0.21	
3/5/2020 17:23:32	20.51	0.19	
3/5/2020 17:23:47	20.52	0.18	
3/5/2020 17:24:02	20.53	0.20	
3/5/2020 17:24:17	20.55	0.20	
3/5/2020 17:24:32	20.53	0.20	
3/5/2020 17:24:47	20.53	0.11	
3/5/2020 17:25:02	20.60	0.26	
3/5/2020 17:25:17	20.66	0.35	
3/5/2020 17:25:32	20.53	0.20	
3/5/2020 17:25:47	20.45	0.21	

15 sec avgs

RM FIELD DATA

Client Medlina
Location Waukegan, IL
Source EO Control System
Date 3/5/2020

Date/Time	Common Stk Oxygen (% v db)	Common Stk CO2 (% v db)	Comments
3/5/2020 17:26:02	20.42	0.19	
3/5/2020 17:26:17	20.52	0.08	
3/5/2020 17:26:32	20.53	0.21	
3/5/2020 17:26:47	20.45	0.11	
3/5/2020 17:27:02	20.56	0.23	
3/5/2020 17:27:17	20.52	0.20	
3/5/2020 17:27:32	20.59	0.25	
3/5/2020 17:27:47	20.65	0.25	
3/5/2020 17:28:02	20.51	0.19	
3/5/2020 17:28:17	20.41	0.09	
3/5/2020 17:28:32	20.56	0.29	
3/5/2020 17:28:47	20.51	0.09	
3/5/2020 17:29:02	20.56	0.24	
3/5/2020 17:29:17	20.66	0.31	
3/5/2020 17:29:32	20.59	0.24	
3/5/2020 17:29:47	20.47	0.20	
3/5/2020 17:30:02	20.52	0.12	
3/5/2020 17:30:17	20.54	0.30	
3/5/2020 17:30:32	20.51	0.07	
3/5/2020 17:30:47	20.53	0.27	
3/5/2020 17:31:02	20.43	0.20	
3/5/2020 17:31:17	20.50	0.21	
3/5/2020 17:31:32	20.49	0.20	
3/5/2020 17:31:47	20.45	0.19	
3/5/2020 17:32:02	20.47	0.19	
3/5/2020 17:32:17	20.49	0.20	
3/3/2020 17:32:32	20.49	0.21	
3/5/2020 17:32:47	20.48	0.20	
3/5/2020 17:33:02	20.47	0.20	
3/5/2020 17:33:17	20.57	0.26	
3/5/2020 17:33:32	20.51	0.23	
3/5/2020 17:33:47	20.38	0.16	
3/5/2020 17:34:02	20.47	0.21	
3/5/2020 17:34:17	20.47	0.18	
3/5/2020 17:34:32	20.47	0.17	
3/5/2020 17:34:47	20.43	0.19	
3/5/2020 17:35:02	20.46	0.20	
3/5/2020 17:35:17	20.48	0.20	
3/5/2020 17:35:32	20.46	0.20	
3/5/2020 17:35:47	20.47	0.18	
3/5/2020 17:36:02	20.49	0.19	
3/5/2020 17:36:17	20.52	0.24	
3/5/2020 17:36:32	20.48	0.20	
3/5/2020 17:36:47	20.52	0.23	
3/5/2020 17:37:02	20.39	0.09	
3/5/2020 17:37:17	20.60	0.29	
3/5/2020 17:37:32	20.53	0.27	
3/5/2020 17:37:47	20.48	0.20	End RA Test Run #9
3/5/2020 17:38:02	20.61	0.32	
3/5/2020 17:38:17	20.49	0.22	
3/5/2020 17:38:32	20.50	0.22	
3/5/2020 17:38:47	20.48	0.21	
3/5/2020 17:39:02	16.00	0.30	
3/5/2020 17:39:17	1.06	-0.01	
3/5/2020 17:39:32	0.15	-0.13	Post-test Bias and Drift Check:
3/5/2020 17:39:47	-0.02	-0.08	zero nitrogen:
3/5/2020 17:40:02	0.10	0.00	0.06 % v db Oxygen
3/5/2020 17:40:17	0.05	-0.04	-0.03 % v db CO2
3/5/2020 17:40:32	0.09	0.00	
3/5/2020 17:40:47	0.01	-0.05	
3/5/2020 17:41:02	-0.04	-0.04	
3/5/2020 17:41:17	0.07	0.00	
3/5/2020 17:41:32	0.05	-0.06	
3/5/2020 17:41:47	-0.07	-0.14	
3/5/2020 17:42:02	0.08	0.00	
3/5/2020 17:42:17	0.07	0.00	
3/5/2020 17:42:32	0.06	0.00	
3/5/2020 17:42:47	2.32	0.03	
3/5/2020 17:43:02	2.15	0.25	
3/5/2020 17:43:17	0.10	-0.02	
3/5/2020 17:43:32	0.00	-0.05	
3/5/2020 17:43:47	0.18	0.12	
3/5/2020 17:44:02	0.07	0.01	
3/5/2020 17:44:17	0.10	0.02	
3/5/2020 17:44:32	10.49	0.14	
3/5/2020 17:44:47	1.16	0.03	
3/5/2020 17:45:02	0.12	0.00	
3/5/2020 17:45:17	0.06	-0.01	
3/5/2020 17:45:32	0.14	0.04	
3/5/2020 17:45:47	-0.04	-0.03	
3/5/2020 17:46:02	0.03	-0.01	
3/5/2020 17:46:17	-0.10	-0.08	
3/5/2020 17:46:32	0.05	0.00	

15 sec avgs

RM FIELD DATA

Client Medline
Location Waukegan, IL
Source EO Control System
Date 3/5/2020

Date/Time	Common Stk Oxygen (% v db)	Common Stk CO2 (% v db)	Comments
3/5/2020 17:46:47	0.04	0.14	
3/5/2020 17:47:02	0.13	0.08	
3/5/2020 17:47:17	0.00	-0.05	
3/5/2020 17:47:32	-0.02	-0.04	
3/5/2020 17:47:47	-0.02	-0.05	
3/5/2020 17:48:02	0.01	0.00	
3/5/2020 17:48:17	0.04	0.11	
3/5/2020 17:48:32	0.04	0.03	
3/5/2020 17:48:47	0.20	0.11	
3/5/2020 17:49:02	0.13	0.05	
3/5/2020 17:49:17	0.13	0.01	
3/5/2020 17:49:32	0.03	0.06	
3/5/2020 17:49:47	0.04	0.00	
3/5/2020 17:50:02	0.07	0.01	
3/5/2020 17:50:17	0.07	0.02	
3/5/2020 17:50:32	0.12	0.09	
3/5/2020 17:50:47	0.01	-0.05	
3/5/2020 17:51:02	-0.10	-0.12	
3/5/2020 17:51:17	0.04	0.00	
3/5/2020 17:51:32	0.01	-0.05	
3/5/2020 17:51:47	0.00	-0.04	
3/5/2020 17:52:02	-0.09	-0.07	
3/5/2020 17:52:17	0.03	0.01	
3/5/2020 17:52:32	-0.01	-0.04	
3/5/2020 17:52:47	0.07	0.02	
3/5/2020 17:53:02	6.08	0.03	
3/5/2020 17:53:17	3.46	0.01	
3/5/2020 17:53:32	0.34	0.10	
3/5/2020 17:53:47	0.01	-0.03	
3/5/2020 17:54:02	-0.08	-0.14	
3/5/2020 17:54:17	-0.01	-0.04	
3/5/2020 17:54:32	0.01	0.03	
3/5/2020 17:54:47	0.05	0.01	
3/5/2020 17:55:02	-0.04	-0.06	
3/5/2020 17:55:17	0.07	0.00	
3/5/2020 17:55:32	13.98	0.14	
3/5/2020 17:55:47	20.04	0.25	
3/5/2020 17:56:02	20.28	0.40	
3/5/2020 17:56:17	20.40	0.24	
3/5/2020 17:56:32	20.30	0.19	
3/5/2020 17:56:47	20.24	0.09	
3/5/2020 17:57:02	20.37	0.25	
3/5/2020 17:57:17	20.34	0.18	
3/5/2020 17:57:32	20.36	0.20	
3/5/2020 17:57:47	20.36	0.20	
3/5/2020 17:58:02	20.34	0.19	
3/5/2020 17:58:17	20.38	0.17	
3/5/2020 17:58:32	20.36	0.20	
3/5/2020 17:58:47	20.28	0.11	
3/5/2020 17:59:02	20.44	0.23	
3/5/2020 17:59:17	20.37	0.17	
3/5/2020 17:59:32	20.42	0.24	
3/5/2020 17:59:47	20.46	0.23	
3/5/2020 18:00:02	20.47	0.25	
3/5/2020 18:00:17	20.39	0.21	
3/5/2020 18:00:32	20.43	0.24	
3/5/2020 18:00:47	20.36	0.20	
3/5/2020 18:01:02	20.39	0.12	
3/5/2020 18:01:17	20.45	0.25	
3/5/2020 18:01:32	20.44	0.22	
3/5/2020 18:01:47	20.41	0.21	
3/5/2020 18:02:02	20.48	0.27	
3/5/2020 18:02:17	20.53	0.24	
3/5/2020 18:02:32	20.30	0.11	
3/5/2020 18:02:47	20.46	0.34	
3/5/2020 18:03:02	20.41	0.20	
3/5/2020 18:03:17	20.45	0.19	
3/5/2020 18:03:32	20.39	0.21	
3/5/2020 18:03:47	20.52	0.25	
3/5/2020 18:04:02	20.49	0.23	
3/5/2020 18:04:17	20.48	0.23	
3/5/2020 18:04:32	20.43	0.20	
3/5/2020 18:04:47	20.44	0.21	
3/5/2020 18:05:02	20.45	0.21	
3/5/2020 18:05:17	4.61	0.80	
3/5/2020 18:05:32	20.82	20.64	
3/5/2020 18:05:47	21.31	21.23	**Post-test Bias end Drift Check:**
3/5/2020 18:06:02	20.92	21.21	**21.0% v db Oxygen:**
3/5/2020 18:06:17	20.87	21.23	**20.87 % v db Oxygen**
3/5/2020 18:06:32	20.80	21.16	
3/5/2020 18:06:47	20.88	21.14	
3/5/2020 18:07:02	20.79	21.24	
3/5/2020 18:07:17	20.91	21.31	

15 sec avgs

RM FIELD DATA

Client Medline
Location Waukegan, IL
Source EO Control System
Data 3/5/2020

Date/Time	Common Stk Oxygen (% v db)	Common Stk CO2 (% v db)	Comments
3/5/2020 18:07:32	16.96	16.81	
3/5/2020 18:07:47	3.11	3.20	
3/5/2020 18:08:02	2.61	2.65	
3/5/2020 18:08:17	2.53	2.56	
3/5/2020 18:08:32	2.56	2.71	
3/5/2020 18:08:47	2.43	2.47	
3/5/2020 18:09:02	2.58	2.57	
3/5/2020 18:09:17	2.53	2.52	
3/5/2020 18:09:32	2.56	2.51	
3/5/2020 18:09:47	2.59	2.58	Post-test Bias and Drift Check:
3/5/2020 18:10:02	2.51	2.51	2.50% v db CO2:
3/5/2020 18:10:17	2.56	2.55	2.51 % v db CO2
3/5/2020 18:10:32	2.52	2.50	
3/5/2020 18:10:47	2.43	2.49	
3/5/2020 18:11:02	2.55	2.55	
3/5/2020 18:11:17	2.54	2.49	
3/5/2020 18:11:32	2.51	2.51	

15 sec avgs

APPENDIX D
FTIR DATA

MONTROSE AIR QUALITY SERVICES

USEPA Method 301-Sec. 12.0
Analyte Spiking
Statistical Analysis and Performance Criteria

Client: Medline ETO Abatement System Common Stack
Date: 2/13/2020
Tracer Gas: 503.1 ppm v Ethane
Spike Gas: 2.103 ppm v Ethylene Oxide

Test Run Number	Date	Spike Specrta	Native Spectra	Spiked Results ppm v Ethylene Oxide S_i	Unspiked Results ppm v Ethylene Oxide M_i	Difference (S_i-M_i) d_i	Difference Squared d_i^2	Tracer Conc. ppm v	Dilution Factor DF	Calc'd. 1-DF	Diluted Spike Conc. ppb v CS	Intermed. Calc. $(1-DF*M_i)$	Theo. Spike Conc. ppb v VS	Recovery %R
1	2/13/2020	125	105	0.229	0.017	0.212	0.045	46.065	0.0916	0.9084	0.19	0.0154	0.21	110.1%
2	2/13/2020	126	106	0.213	0.017	0.196	0.038	46.018	0.0915	0.9085	0.19	0.0154	0.21	102.5%
3	2/13/2020	142	133	0.204	0.014	0.190	0.036	46.099	0.0916	0.9084	0.19	0.0127	0.21	99.3%
4	2/13/2020	143	134	0.200	0.015	0.185	0.034	46.104	0.0916	0.9084	0.19	0.0136	0.21	96.9%
5	2/13/2020	146	152	0.202	0.010	0.192	0.037	46.075	0.0916	0.9084	0.19	0.0091	0.20	100.2%
6	2/13/2020	147	153	0.202	0.018	0.184	0.034	46.279	0.0920	0.9080	0.19	0.0163	0.21	96.3%
7	2/13/2020	156	160	0.202	0.021	0.181	0.033	46.075	0.0916	0.9084	0.19	0.0191	0.21	95.4%
8	2/13/2020	157	161	0.202	0.020	0.182	0.033	46.029	0.0915	0.9085	0.19	0.0182	0.21	95.9%
9	2/13/2020	164	167	0.203	0.019	0.184	0.034	46.154	0.0917	0.9083	0.19	0.0173	0.21	96.6%
10	2/13/2020	165	168	0.204	0.013	0.191	0.036	46.190	0.0918	0.9082	0.19	0.0118	0.20	99.6%
11	2/13/2020	171	176	0.206	0.015	0.191	0.036	46.174	0.0918	0.9082	0.19	0.0136	0.21	99.7%
12	2/13/2020	172	177	0.206	0.020	0.186	0.035	46.178	0.0918	0.9082	0.19	0.0182	0.21	97.5%
			Mean of valid test runs:	**0.206**	**0.017**	**0.190**	**0.036**				**0.19**		**0.21**	**99.17%**

Number of test runs used in comparison:

n = **12** **test runs**

t value @ "n" runs (Table 301-3):

$t_{0.95}$ = **2.201**

Sum of Differences:

$\sum_i^n d_i$ = **2.2740**

Sum of Squared Differences:

$\sum_i^n d_i^2$ = **0.4317**

Bias Analysis: Bias (Eq.301-18 derivative)

$d_i = \frac{(S_{1_i}+S_{2_i})}{2} - \frac{(M_{1_i}+M_{2_i})}{2} - CS$ ***or*** $d_i = \overline{S_i} - \overline{M_i} - VS$ = **-0.0183**

Bias Analysis: Numerical Bias (Eq. 301-19):

$B = \frac{\sum_i^n d_i}{n}$ = **-0.0183**

Bias Analysis: Standard Deviation of the Differences (Eq. 301-20):

$SD_d = \sqrt{\frac{\sum_i^n (d_i - d_m)^2}{(n-1)}}$ = **0.6285**

Bias Analysis: T-Test @ 95% (Eq. 301-21, where $t < t_{0.95}$):

$t = \frac{|d_m|}{\left(\frac{SD_d}{\sqrt{n}}\right)}$ = **12.5336** **evaluate using Relative Bias**

Bias Analysis: Relative Bias (Eq. 301-22, where B_R <10%):

$B_R = \left|\frac{B}{VS}\right| \times 100\%$ = **8.83%** **acceptable-no Bias Correction required**

Bias Analysis: Bias Correction Factor (Eq. 301-8):

$CF = \left(\frac{1}{1+\frac{B}{CS}}\right)$ = **1.0968**

Precision Assessment: Precision Test Standard Deviation (Eq. 301-23):

$SD = \sqrt{\frac{\sum_i^n (s_i - s_m)^2}{(n-1)}}$ = **0.0079**

Precision Assessment: Relative Standard Deviation (Eq.301-9 where RSD <20%)

$RSD = \left(\frac{SD}{S_m}\right) \times 100\%$ = **3.86%** **acceptable**

% Spike Recovery (70%< %R <130%):

$\%R = \left(\frac{SD}{VS}\right) \times 100\%$ = **99.17%**

MONTROSE

M928ET-663754-RT-414

113 of 269

Spectrum	Date	Time	Temp	Pressure	Ethane [150C] [74-84-0] [2x8cm-1] [Aromatics Filter]		Ethylene Oxide [ppb]		Ethylene Oxide [150C] [75-21-8] [2x8cm-1] [Aromatics Filter]		Filter interference.LAB		Methane [150C] [74-82-8] [2x8cm-1] [Aromatics Filter] [SN110281261]		Water [150C] [7732-18-5] [2x8cm-1] [Aromatics Filter] [SN110281261]		MAX.MKS.BADSCANCOUNT		MAX.MKS.LASERPP	
			(C)	(ATM)	Con (ppm)	MDC#3 (ppm)	Con (ppb)	MDC#3 (ppm)	Con (ppm)	MDC#3 (ppm)	Con (ppm)	MDC#3 (ppm)	Con (ppm)	MDC#3 (ppm)	Con (ppm)	MDC#3 (ppm)	Con (ppm)	MDC#3 (ppm)	Con (ppm)	MDC#3 (ppm)
ZERO DIRECT_0000001.LAB	2/13/2020	09:11:36	150.3	1.001	-0.024	-0.153	11.807	Undefined	0.012	0.010	0.903	0.110	0.000	-0.018	84.574	48.243	0.000	Undefined	7.422	Undefined
ZERO DIRECT_0000002.LAB	2/13/2020	09:12:35	150.2	1.001	-0.051	-0.186	-1.350	Undefined	-0.001	-0.008	0.977	0.116	-0.008	-0.022	4.046	59.061	0.000	Undefined	7.500	Undefined
ZERO DIRECT_0000003.LAB	2/13/2020	09:13:33	150.3	1.001	-0.090	-0.171	3.790	Undefined	0.004	0.011	0.999	0.114	0.007	0.028	2.341	49.735	0.000	Undefined	7.422	Undefined
ZERO DIRECT_0000004.LAB	2/13/2020	09:14:32	150.2	1.001	-0.030	-0.097	0.609	Undefined	0.001	0.013	0.995	0.081	0.001	0.024	6.976	57.538	0.000	Undefined	7.695	Undefined
ZERO DIRECT_0000005.LAB	2/13/2020	09:15:31	150.2	1.001	-0.033	-0.172	2.387	Undefined	0.002	0.006	0.982	0.113	-0.005	-0.024	4.377	57.671	0.000	Undefined	7.539	Undefined
ZERO DIRECT_0000006.LAB	2/13/2020	09:16:30	150.3	1.001	-0.042	-0.149	6.953	Undefined	0.007	0.008	1.002	0.101	0.005	0.017	3.894	49.763	0.000	Undefined	7.539	Undefined
ZERO DIRECT_0000007.LAB	2/13/2020	09:17:29	150.3	1.001	-0.014	-0.199	-2.266	Undefined	-0.002	-0.008	0.994	0.123	-0.001	-0.016	0.814	39.747	0.000	Undefined	7.773	Undefined
ZERO DIRECT_0000008.LAB	2/13/2020	09:18:27	150.3	1.001	0.048	0.099	-0.987	Undefined	-0.001	-0.011	1.005	0.073	0.003	0.018	3.791	34.539	0.000	Undefined	7.695	Undefined
ZERO DIRECT_0000009.LAB	2/13/2020	09:19:26	150.4	1.001	0.000	0.000	0.000	Undefined	0.000	0.000	1.000	0.000	0.000	0.000	0.000	0.000	0.000	Undefined	7.500	Undefined
ZERO DIRECT_0000010.LAB	2/13/2020	09:20:25	150.4	1.001	-0.024	-0.155	-0.702	Undefined	-0.001	-0.010	0.997	0.099	-0.002	-0.016	4.994	45.604	0.000	Undefined	7.813	Undefined
ZERO DIRECT_0000011.LAB	2/13/2020	09:21:24	150.2	1.001	0.000	-0.144	4.792	Undefined	0.005	0.010	1.001	0.099	-0.009	-0.017	6.734	46.489	0.000	Undefined	7.305	Undefined
ZERO DIRECT_0000012.LAB	2/13/2020	09:22:23	150.3	1.001	-0.009	-0.147	1.783	Undefined	0.002	0.007	0.958	0.098	0.000	-0.022	5.398	41.464	0.000	Undefined	7.422	Undefined
ZERO DIRECT_0000013.LAB	2/13/2020	09:23:21	150.2	1.001	0.014	0.105	5.046	Undefined	0.005	0.008	0.995	0.077	-0.012	-0.021	2.704	40.280	0.000	Undefined	7.734	Undefined
ZERO DIRECT_0000014.LAB	2/13/2020	09:24:20	150.4	1.001	0.005	0.110	0.809	Undefined	0.001	0.008	0.963	0.080	-0.001	-0.024	4.795	36.599	0.000	Undefined	7.305	Undefined
ZERO DIRECT_0000015.LAB	2/13/2020	09:25:19	150.2	1.001	-0.008	-0.160	3.979	Undefined	0.004	0.006	0.991	0.106	0.005	0.025	4.341	45.913	0.000	Undefined	7.734	Undefined
ZERO DIRECT_0000016.LAB	2/13/2020	09:26:18	150.2	1.001	0.017	0.146	-2.146	Undefined	-0.002	-0.010	0.975	0.098	-0.007	-0.025	5.405	43.416	0.000	Undefined	7.773	Undefined
ZERO DIRECT_0000017.LAB	2/13/2020	09:27:17	150.2	1.001	0.022	0.106	3.645	Undefined	0.004	0.012	0.990	0.081	-0.001	-0.026	3.456	40.713	0.000	Undefined	7.539	Undefined
ZERO DIRECT_0000018.LAB	2/13/2020	09:28:15	150.3	1.001	0.083	0.176	-2.710	Undefined	-0.003	-0.011	0.974	0.124	-0.010	-0.033	4.932	59.334	0.000	Undefined	7.695	Undefined
ZERO DIRECT_0000019.LAB	2/13/2020	09:29:14	150.4	1.001	0.069	0.157	3.030	Undefined	0.003	0.012	0.981	0.109	-0.003	-0.037	4.120	71.581	0.000	Undefined	7.617	Undefined
CTS DIRECT_0000020.LAB	2/13/2020	09:39:37	150.3	1.001	0.020	0.193	348.972	Undefined	0.349	0.018	0.941	0.140	0.135	0.035	13.902	76.713	0.000	Undefined	7.539	Undefined
CTS DIRECT_0000021.LAB	2/13/2020	09:39:51	150.3	1.001	0.149	0.264	233.549	Undefined	0.234	0.023	0.948	0.179	0.730	0.038	10.627	101.561	0.000	Undefined	7.500	Undefined
CTS DIRECT_0000022.LAB	2/13/2020	09:40:06	150.4	1.001	0.074	0.178	188.272	Undefined	0.188	0.021	0.933	0.149	0.927	0.046	11.067	82.782	0.000	Undefined	7.578	Undefined
CTS DIRECT_0000023.LAB	2/13/2020	09:40:21	150.3	1.001	0.112	0.422	149.691	Undefined	0.150	0.098	0.957	0.443	5.350	0.182	30.894	117.265	0.000	Undefined	7.500	Undefined
CTS DIRECT_0000024.LAB	2/13/2020	09:40:35	150.2	1.001	0.119	1.530	170.961	Undefined	0.171	0.387	1.019	1.784	25.245	0.919	1.147	356.452	0.000	Undefined	7.461	Undefined
CTS DIRECT_0000025.LAB	2/13/2020	09:40:50	150.1	1.001	0.266	2.602	193.530	Undefined	0.194	0.588	1.125	2.866	42.140	1.530	-13.417	-539.975	0.000	Undefined	7.734	Undefined
CTS DIRECT_0000026.LAB	2/13/2020	09:41:05	150.2	1.001	0.471	5.061	234.581	Undefined	0.235	0.761	1.268	4.931	56.942	2.185	-55.781	-911.541	0.000	Undefined	7.461	Undefined
CTS DIRECT_0000027.LAB	2/13/2020	09:41:19	150.1	1.001	-0.050	-3.680	212.005	Undefined	0.212	0.910	0.971	4.474	67.024	2.636	1.004	835.025	0.000	Undefined	7.734	Undefined
CTS DIRECT_0000028.LAB	2/13/2020	09:41:34	150.4	1.001	0.081	3.648	231.952	Undefined	0.232	0.957	1.057	4.419	73.140	2.816	-25.854	-830.297	0.000	Undefined	7.461	Undefined
CTS DIRECT_0000029.LAB	2/13/2020	09:41:49	150.2	1.001	-0.278	-4.531	330.097	Undefined	0.330	1.071	1.159	5.209	87.697	3.421	-57.760	-1025.347	0.000	Undefined	7.656	Undefined
CTS DIRECT_0000030.LAB	2/13/2020	09:42:04	150.2	1.001	0.124	0.403	15.311	Undefined	0.015	0.048	0.967	0.320	2.424	0.098	28.601	127.157	0.000	Undefined	7.656	Undefined
CTS DIRECT_0000031.LAB	2/13/2020	09:42:18	150.2	1.001	-0.041	-4.009	199.298	Undefined	0.199	0.716	1.131	4.260	51.860	2.089	-58.382	-826.879	0.000	Undefined	7.500	Undefined
CTS DIRECT_0000032.LAB	2/13/2020	09:42:33	150.4	1.001	0.241	4.038	250.947	Undefined	0.251	1.031	1.095	4.676	81.086	3.097	-46.309	-880.548	0.000	Undefined	7.305	Undefined
CTS DIRECT_0000033.LAB	2/13/2020	09:42:48	150.2	1.001	0.342	4.337	268.028	Undefined	0.268	1.055	1.164	4.890	84.259	3.225	-56.608	-927.677	0.000	Undefined	7.578	Undefined
CTS DIRECT_0000034.LAB	2/13/2020	09:43:02	150.3	1.001	0.372	4.561	244.440	Undefined	0.244	1.064	1.188	5.035	86.755	3.287	-67.944	-947.902	0.000	Undefined	7.227	Undefined
CTS DIRECT_0000035.LAB	2/13/2020	09:43:17	150.3	1.001	0.386	4.790	270.503	Undefined	0.271	1.079	1.179	5.187	88.106	3.356	-68.572	-977.665	0.000	Undefined	7.344	Undefined
CTS DIRECT_0000036.LAB	2/13/2020	09:43:32	150.4	1.001	0.421	4.929	282.381	Undefined	0.282	1.102	1.221	5.305	89.091	3.411	-70.284	-997.555	0.000	Undefined	7.305	Undefined
CTS DIRECT_0000037.LAB	2/13/2020	09:43:46	150.2	1.001	0.446	5.048	284.930	Undefined	0.285	1.098	1.198	5.376	89.834	3.432	-68.440	-1013.263	0.000	Undefined	7.500	Undefined
CTS DIRECT_0000038.LAB	2/13/2020	09:44:01	150.3	1.001	0.442	5.374	277.201	Undefined	0.277	1.115	1.194	5.625	92.028	3.530	-73.165	-1061.582	0.000	Undefined	7.539	Undefined
CTS DIRECT_0000039.LAB	2/13/2020	09:44:16	150.2	1.001	0.480	5.555	291.615	Undefined	0.292	1.127	1.228	5.759	92.759	3.571	-75.513	-1070.854	0.000	Undefined	7.656	Undefined
CTS DIRECT_0000040.LAB	2/13/2020	09:44:31	150.3	1.001	0.496	5.629	293.226	Undefined	0.293	1.131	1.205	5.790	93.310	3.580	-78.846	-1079.387	0.000	Undefined	7.500	Undefined
CTS DIRECT_0000041.LAB	2/13/2020	09:44:45	150.3	1.001	0.525	5.935	297.613	Undefined	0.298	1.144	1.243	6.031	94.868	3.659	-93.885	-1117.442	0.000	Undefined	7.578	Undefined
CTS DIRECT_0000042.LAB	2/13/2020	09:45:00	150.2	1.001	0.638	6.386	304.582	Undefined	0.305	1.169	1.288	6.380	96.977	3.763	-102.225	-1187.522	0.000	Undefined	7.578	Undefined
CTS DIRECT_0000043.LAB	2/13/2020	09:45:15	150.4	1.001	0.634	6.363	297.041	Undefined	0.297	1.156	1.291	6.353	97.239	3.745	-96.652	-1177.021	0.000	Undefined	7.500	Undefined
CTS DIRECT_0000044.LAB	2/13/2020	09:45:29	150.3	1.001	0.649	6.637	311.401	Undefined	0.311	1.174	1.333	6.562	98.373	3.804	-101.123	-1217.582	0.000	Undefined	7.305	Undefined
CTS DIRECT_0000045.LAB	2/13/2020	09:45:44	150.2	1.001	0.741	6.914	323.485	Undefined	0.323	1.181	1.297	6.780	99.906	3.864	-113.910	-1258.635	0.000	Undefined	7.539	Undefined
CTS DIRECT_0000046.LAB	2/13/2020	09:45:59	150.2	1.001	0.669	6.999	322.121	Undefined	0.322	1.196	1.314	6.865	100.205	3.904	-102.790	-1276.747	0.000	Undefined	7.422	Undefined
CTS DIRECT_0000047.LAB	2/13/2020	09:46:13	150.2	1.001	0.733	6.484	294.062	Undefined	0.294	1.159	1.309	6.445	97.938	3.757	-103.595	-1199.425	0.000	Undefined	7.813	Undefined
CAL DIRECT_0000048.LAB	2/13/2020	09:58:33	150.4	1.003	523.804	5.559	2345.598	Undefined	2.350	0.027	0.695	1.718	0.339	0.057	47.626	526.814	0.000	Undefined	7.656	Undefined
CAL DIRECT_0000049.LAB	2/13/2020	09:58:48	150.4	1.001	523.413	5.407	2342.557	Undefined	2.343	0.028	0.676	1.755	0.198	0.059	35.533	538.056	0.000	Undefined	7.422	Undefined
CAL DIRECT_0000050.LAB	2/13/2020	09:59:03	150.4	0.998	522.212	5.212	2339.317	Undefined	2.339	0.040	0.577	1.698	1.945	0.091	44.250	549.670	0.000	Undefined	7.578	Undefined
CAL DIRECT_0000051.LAB	2/13/2020	09:59:17	150.3	0.998	522.772	5.200	2339.941	Undefined	2.340	0.027	0.728	1.665	0.148	0.063	50.893	536.908	0.000	Undefined	7.461	Undefined
CAL DIRECT_0000052.LAB	2/13/2020	09:59:32	150.2	0.998	522.437	5.367	2341.857	Undefined	2.342	0.027	0.683	1.720	0.151	0.066	45.334	557.823	0.000	Undefined	7.539	Undefined
CAL DIRECT_0000053.LAB	2/13/2020	09:59:47	150.2	0.998	522.185	5.301	2335.065	Undefined	2.335	0.030	0.657	1.677	0.144	0.066	46.112	513.287	0.000	Undefined	7.383	Undefined
CAL DIRECT_0000054.LAB	2/13/2020	10:00:02	150.3	0.998	522.879	5.037	2337.959	Undefined	2.338	0.028	0.623	1.596	0.322	0.066	48.221	570.757	0.000	Undefined	7.383	Undefined
CAL DIRECT_0000055.LAB	2/13/2020	10:00:16	150.4	0.996	520.303	5.414	2336.773	Undefined	2.337	0.064	0.631	1.777	2.958	0.112	43.544	555.051	0.000	Undefined	7.617	Undefined
CAL DIRECT_0000056.LAB	2/13/2020	10:00:31	150.4	0.995	518.862	5.693	2338.517	Undefined	2.339	0.072	0.665	1.798	4.363	0.156	38.376	573.353	0.000	Undefined	7.305	Undefined
CAL DIRECT_0000057.LAB	2/13/2020	10:00:46	150.4	0.995	518.120	5.057	2331.628	Undefined	2.332	0.049	0.684	1.646	1.732	0.077	54.757	498.950	0.000	Undefined	7.734	Undefined
CAL DIRECT_0000058.LAB	2/13/2020	10:01:00	150.3	0.995	518.396	4.792	2329.579	Undefined	2.330	0.025	0.583	1.564	0.381	0.052	39.302	529.680	0.000	Undefined	7.500	Undefined
CAL DIRECT_0000059.LAB	2/13/2020	10:01:15	150.5	0.995	518.566	5.009	2335.568	Undefined	2.336	0.018	0.514	1.591	0.490	0.067	36.680	539.729	0.000	Undefined	7.773	Undefined
CAL DIRECT_0000060.LAB	2/13/2020	10:01:30	150.4	0.995	518.347	5.031	2330.467	Undefined	2.330	0.027	0.638	1.614	0.534	0.051	37.606	515.807	0.000	Undefined	7.500	Undefined
CAL DIRECT_0000061.LAB	2/13/2020	10:01:45	150.5	0.995	518.138	5.005	2337.752	Undefined	2.338	0.032	0.665	1.634	0.552	0.071	54.355	597.245	0.000	Undefined	7.461	Undefined
CAL DIRECT_0000062.LAB	2/13/2020	10:01:59	150.4	0.995	518.041	5.086	2332.794	Undefined	2.333	0.026	0.698	1.605	0.537	0.061	53.682	519.976	0.000	Undefined	7.578	Undefined
CAL DIRECT_0000063.LAB	2/13/2020	10:02:14	150.3	0.994	518.372	5.064	2328.625	Undefined	2.329	0.027	0.652	1.628	0.542	0.069	44.238	524.190	0.000	Undefined	7.305	Undefined
CAL DIRECT_0000064.LAB	2/13/2020	10:02:29	150.5	0.995	518.516	4.975	2320.945	Undefined	2.321	0.025	0.649	1.595	0.539	0.054	48.161	536.448	0.000	Undefined	7.344	Undefined
CAL DIRECT_0000065.LAB	2/13/2020	10:02:43	150.4	0.995	518.032	4.854	2329.395	Undefined	2.329	0.020	0.560	1.597	0.531	0.060	43.767	516.716	0.000	Undefined	7.656	Undefined
CAL DIRECT_0000066.LAB	2/13/2020	10:02:58	150.3	0.995	517.775	4.998	2332.964	Undefined	2.333	0.026	0.697	1.648	0.521	0.063	40.293	487.342	0.000	Undefined	7.305	Undefined
CAL DIRECT_0000067.LAB	2/13/2020	10:03:13	150.4	0.995	518.568	4.924	2317.856	Undefined	2.318	0.025	0.589	1.613	0.522	0.060	31.860	497.503	0.000	Undefined	7.539	Undefined
CAL DIRECT_0000068.LAB	2/13/2020	10:03:27	150.4	0.995	518.256	4.978	2325.533	Undefined	2.326	0.026	0.604	1.646	0.491	0.054	55.391	573.170	0.000	Undefined	7.656	Undefined
CAL DIRECT_0000069.LAB	2/13/2020	10:03:42	150.4	0.995	517.926	5.031	2334.414	Undefined	2.334	0.021	0.681	1.588	0.487	0.061	37.755	524.137	0.000	Undefined	7.539	Undefined
CAL DIRECT_0000070.LAB	2/13/2020	10:03:57	150.4	0.995	518.582	5.154	2328.756	Undefined	2.329	0.026	0.615	1.706	0.502	0.052	44.684	507.982	0.000	Undefined	7.656	Undefined
CAL DIRECT_0000071.LAB	2/13/2020	10:04:12	150.3	0.995	518.351	4.980	2338.966	Undefined	2.339	0.023	0.554	1.644	0.461	0.063	65.037	563.842	0.000	Undefined	7.383	Undefined
CAL DIRECT_0000072.LAB	2/13/2020	10:04:26	150.3	0.994	518.323	5.043	2111.628	Undefined	2.338	0.032	0.677	1.593	0.448	0.049	41.934	542.539	0.000	Undefined	7.539	Undefined
CAL DIRECT_0000073.LAB	2/13/2020	10:04:41	150.2	0.993	518.500	5.074	2332.161	Undefined	2.332	0.025	0.619	1.690	0.437	0.059	35.312	545.242	0.000	Undefined	7.461	Undefined
CAL DIRECT_0000074.LAB	2/13/2020	10:04:56	150.5	0.993	517.272	4.834	2307.119	Undefined	2.307	0.022	0.615	1.617	0.417	0.053	51.731	536.427	0.000	Undefined	7.227	Undefined

CAL DIRECT_0000075.LAB	2/13/2020	10:05:10	150.3	0.995	515.405	5.461	2303.157	Undefined	2.303	0.108	0.550	1.873	6.037	0.229	32.544	533.179	0.000	Undefined	7.383	Undefined
CAL DIRECT_0000076.LAB	2/13/2020	10:05:25	150.4	0.995	517.065	5.271	2350.391	Undefined	2.350	0.068	0.657	1.698	3.443	0.141	38.574	529.680	0.000	Undefined	7.266	Undefined
CAL DIRECT_0000077.LAB	2/13/2020	10:05:40	150.4	0.995	518.185	5.004	2331.886	Undefined	2.332	0.029	0.479	1.620	-0.076	-0.056	54.728	559.362	0.000	Undefined	7.617	Undefined
CAL DIRECT_0000078.LAB	2/13/2020	10:05:54	150.4	0.994	518.445	4.913	2331.589	Undefined	2.332	0.027	0.604	1.639	0.002	0.062	45.569	527.721	0.000	Undefined	7.305	Undefined
CAL DIRECT_0000079.LAB	2/13/2020	10:06:09	150.3	0.998	507.142	6.732	2315.577	Undefined	2.316	0.073	0.411	2.247	4.233	0.159	30.616	624.951	0.000	Undefined	7.773	Undefined
CAL DIRECT_0000080.LAB	2/13/2020	10:06:24	150.3	0.998	474.727	4.847	2128.217	Undefined	2.128	0.030	0.775	1.564	-0.006	-0.063	85.854	532.694	0.000	Undefined	7.539	Undefined
CAL DIRECT_0000081.LAB	2/13/2020	10:06:39	150.3	0.998	474.354	4.814	2118.277	Undefined	2.118	0.024	0.680	1.595	0.002	0.057	77.071	477.011	0.000	Undefined	7.656	Undefined
CAL DIRECT_0000082.LAB	2/13/2020	10:06:53	150.4	0.999	474.151	5.155	2119.482	Undefined	2.119	0.030	0.650	1.682	0.055	0.063	74.586	540.826	0.000	Undefined	7.539	Undefined
CAL DIRECT_0000083.LAB	2/13/2020	10:07:08	150.2	0.998	494.344	8.554	2219.134	Undefined	2.219	0.026	-0.096	-3.000	-0.091	-0.067	9.933	711.197	0.000	Undefined	7.344	Undefined
CAL DIRECT_0000084.LAB	2/13/2020	10:07:23	150.4	0.998	497.780	7.739	2238.999	Undefined	2.239	0.028	-0.094	-2.743	-0.270	-0.061	5.711	636.205	0.000	Undefined	7.656	Undefined
CAL DIRECT_0000085.LAB	2/13/2020	10:07:37	150.3	0.998	497.824	8.209	2237.129	Undefined	2.237	0.026	0.020	2.812	-0.245	-0.068	20.789	699.680	0.000	Undefined	7.422	Undefined
CAL DIRECT_0000086.LAB	2/13/2020	10:07:52	150.4	0.998	494.390	8.757	2215.683	Undefined	2.216	0.033	-0.078	-3.052	-0.298	-0.068	17.818	750.485	0.000	Undefined	7.305	Undefined
CAL DIRECT_0000087.LAB	2/13/2020	10:08:07	150.2	0.998	492.463	8.597	2210.258	Undefined	2.210	0.027	-0.138	-3.051	-0.244	-0.063	13.326	749.431	0.000	Undefined	7.266	Undefined
CAL DIRECT_0000088.LAB	2/13/2020	10:08:21	150.2	0.998	492.563	8.920	2214.116	Undefined	2.214	0.027	-0.055	-3.124	-0.234	-0.065	5.634	700.557	0.000	Undefined	7.539	Undefined
CAL DIRECT_0000089.LAB	2/13/2020	10:08:36	150.2	0.998	492.557	8.527	2195.269	Undefined	2.195	0.032	-0.219	-3.043	-0.237	-0.064	13.006	738.892	0.000	Undefined	7.617	Undefined
CAL DIRECT_0000090.LAB	2/13/2020	10:08:51	150.1	0.998	491.886	8.728	2196.245	Undefined	2.196	0.030	-0.109	-3.044	-0.227	-0.063	-0.585	-704.775	0.000	Undefined	7.383	Undefined
CAL DIRECT_0000091.LAB	2/13/2020	10:09:06	150.4	0.998	492.316	8.594	2202.088	Undefined	2.202	0.028	-0.135	-3.038	-0.229	-0.058	13.396	689.398	0.000	Undefined	7.617	Undefined
CAL DIRECT_0000092.LAB	2/13/2020	10:09:20	150.4	0.998	492.243	8.587	2196.686	Undefined	2.197	0.030	-0.119	-3.030	-0.234	-0.057	4.451	700.676	0.000	Undefined	7.344	Undefined
CAL DIRECT_0000093.LAB	2/13/2020	10:09:35	150.2	0.998	492.481	8.891	2196.649	Undefined	2.197	0.033	-0.121	-3.113	-0.234	-0.071	-4.384	-736.527	0.000	Undefined	7.617	Undefined
CAL DIRECT_0000094.LAB	2/13/2020	10:09:50	150.3	0.998	492.397	8.713	2197.646	Undefined	2.198	0.022	-0.149	-3.099	-0.237	-0.067	5.944	716.116	0.000	Undefined	7.461	Undefined
CAL DIRECT_0000095.LAB	2/13/2020	10:10:04	150.1	0.998	491.542	8.474	2208.690	Undefined	2.209	0.032	-0.146	-2.997	-0.228	-0.066	10.121	745.923	0.000	Undefined	7.305	Undefined
CAL DIRECT_0000096.LAB	2/13/2020	10:10:19	150.2	0.998	491.925	8.928	2202.186	Undefined	2.202	0.024	-0.135	-3.112	-0.236	-0.074	11.570	759.355	0.000	Undefined	7.539	Undefined
ZERO SYSTEM_0000097.LAB	2/13/2020	10:15:04	150.2	0.998	0.091	0.218	1.314	Undefined	0.001	0.042	0.872	0.185	0.329	0.042	640.141	55.572	0.000	Undefined	7.461	Undefined
ZERO SYSTEM_0000098.LAB	2/13/2020	10:16:03	150.2	0.995	0.092	0.196	-7.674	Undefined	-0.008	-0.040	0.869	0.180	0.305	0.042	594.491	59.031	0.000	Undefined	7.422	Undefined
CTS SYSTEM_0000099.LAB	2/13/2020	10:16:55	150.2	0.997	0.372	0.585	-8.698	Undefined	-0.009	-0.154	0.860	0.610	1.847	0.137	2439.038	123.210	0.000	Undefined	7.578	Undefined
CTS SYSTEM_0000100.LAB	2/13/2020	10:17:10	150.1	0.995	-0.141	-2.955	127.436	Undefined	0.127	0.685	0.896	3.204	18.239	0.952	92.192	689.163	0.000	Undefined	7.266	Undefined
CTS SYSTEM_0000101.LAB	2/13/2020	10:17:25	150.4	0.996	2.409	2.862	183.825	Undefined	0.184	0.617	1.000	3.277	45.248	1.735	32.674	639.420	0.000	Undefined	7.500	Undefined
CTS SYSTEM_0000102.LAB	2/13/2020	10:17:39	150.3	0.996	2.121	3.206	197.606	Undefined	0.198	0.650	1.027	3.467	47.149	1.769	16.568	657.594	0.000	Undefined	7.578	Undefined
CTS SYSTEM_0000103.LAB	2/13/2020	10:17:54	150.2	0.998	0.580	4.499	276.656	Undefined	0.277	1.065	1.100	4.986	85.275	3.277	-21.522	-934.220	0.000	Undefined	7.227	Undefined
CTS SYSTEM_0000104.LAB	2/13/2020	10:18:09	150.3	0.998	0.439	5.036	286.962	Undefined	0.287	1.100	1.150	5.376	89.755	3.433	-44.945	-999.619	0.000	Undefined	7.500	Undefined
CTS SYSTEM_0000105.LAB	2/13/2020	10:18:23	150.2	0.997	0.500	5.257	292.682	Undefined	0.293	1.109	1.169	5.550	91.166	3.497	-40.631	-1043.839	0.000	Undefined	7.461	Undefined
CTS SYSTEM_0000106.LAB	2/13/2020	10:18:38	150.3	0.994	0.591	5.865	305.859	Undefined	0.306	1.143	1.242	5.993	94.717	3.641	-45.919	-1112.800	0.000	Undefined	7.539	Undefined
CTS SYSTEM_0000107.LAB	2/13/2020	10:18:53	150.3	0.998	0.632	6.454	317.015	Undefined	0.317	1.165	1.222	6.431	97.404	3.769	-72.173	-1194.595	0.000	Undefined	7.422	Undefined
CTS SYSTEM_0000108.LAB	2/13/2020	10:19:07	150.3	0.997	0.636	6.519	312.731	Undefined	0.313	1.167	1.242	6.496	97.937	3.787	-81.084	-1208.714	0.000	Undefined	7.266	Undefined
CTS SYSTEM_0000109.LAB	2/13/2020	10:19:22	150.3	0.998	0.608	6.616	316.913	Undefined	0.317	1.170	1.273	6.539	98.099	3.798	-75.364	-1215.191	0.000	Undefined	7.383	Undefined
CTS SYSTEM_0000110.LAB	2/13/2020	10:19:37	150.2	0.998	0.657	6.562	322.810	Undefined	0.323	1.173	1.246	6.524	98.159	3.792	-76.880	-1208.042	0.000	Undefined	7.388	Undefined
CTS SYSTEM_0000111.LAB	2/13/2020	10:19:52	150.4	0.999	0.650	6.606	313.904	Undefined	0.314	1.167	1.284	6.542	98.263	3.798	-75.005	-1217.082	0.000	Undefined	7.656	Undefined
CTS SYSTEM_0000112.LAB	2/13/2020	10:20:06	150.2	0.998	0.619	6.620	311.900	Undefined	0.312	1.177	1.246	6.582	98.463	3.815	-85.659	-1225.553	0.000	Undefined	7.461	Undefined
CTS SYSTEM_0000113.LAB	2/13/2020	10:20:21	150.4	0.996	0.666	6.719	304.064	Undefined	0.304	1.171	1.265	6.643	99.022	3.808	-80.336	-1230.598	0.000	Undefined	7.539	Undefined
CTS SYSTEM_0000114.LAB	2/13/2020	10:20:36	150.3	0.994	0.609	6.758	316.889	Undefined	0.317	1.186	1.254	6.693	99.437	3.868	-78.149	-1248.147	0.000	Undefined	7.500	Undefined
CTS SYSTEM_0000115.LAB	2/13/2020	10:20:50	150.4	0.997	0.567	6.794	312.886	Undefined	0.313	1.172	1.234	6.691	99.417	3.826	-91.488	-1237.482	0.000	Undefined	7.383	Undefined
CTS SYSTEM_0000116.LAB	2/13/2020	10:21:05	150.4	0.998	0.668	6.810	316.366	Undefined	0.316	1.177	1.254	6.707	99.481	3.836	-83.883	-1242.267	0.000	Undefined	7.578	Undefined
CTS SYSTEM_0000117.LAB	2/13/2020	10:21:20	150.4	0.998	0.647	6.847	317.410	Undefined	0.317	1.176	1.267	6.736	99.593	3.851	-83.142	-1249.078	0.000	Undefined	7.383	Undefined
CTS SYSTEM_0000118.LAB	2/13/2020	10:21:34	150.4	0.996	0.614	6.914	311.722	Undefined	0.312	1.179	1.247	6.781	99.907	3.850	-83.664	-1256.591	0.000	Undefined	7.461	Undefined
NATIVE_0000119.LAB	2/13/2020	10:22:26	150.2	0.996	0.323	1.520	-54.710	Undefined	-0.055	-0.449	0.924	1.729	4.043	0.408	7543.285	343.540	0.000	Undefined	7.383	Undefined
NATIVE_0000120.LAB	2/13/2020	10:22:41	150.2	0.995	0.296	1.498	-69.992	Undefined	-0.070	-0.455	0.915	1.745	3.970	0.416	7600.538	348.827	0.000	Undefined	7.500	Undefined
NATIVE_0000121.LAB	2/13/2020	10:22:56	150.4	0.998	0.209	1.471	-57.522	Undefined	-0.058	-0.453	0.901	1.733	3.933	0.420	7595.065	345.530	0.000	Undefined	7.461	Undefined
NATIVE_0000122.LAB	2/13/2020	10:23:10	150.4	0.998	0.247	1.438	-57.076	Undefined	-0.057	-0.451	0.890	1.725	3.907	0.424	7580.209	349.724	0.000	Undefined	7.344	Undefined
NATIVE_0000123.LAB	2/13/2020	10:23:25	150.3	0.998	0.274	1.496	-64.838	Undefined	-0.065	-0.453	0.943	1.734	3.872	0.413	7611.205	352.238	0.000	Undefined	7.500	Undefined
NATIVE_0000124.LAB	2/13/2020	10:23:40	150.3	0.998	0.262	1.539	-58.939	Undefined	-0.059	-0.454	0.907	1.756	3.846	0.414	7605.638	351.870	0.000	Undefined	7.461	Undefined
NATIVE_0000125.LAB	2/13/2020	10:23:55	150.2	0.995	0.217	1.518	-62.951	Undefined	-0.063	-0.455	0.913	1.766	3.854	0.420	7625.360	358.641	0.000	Undefined	7.539	Undefined
NATIVE_0000126.LAB	2/13/2020	10:24:09	150.2	0.998	0.268	1.530	-64.756	Undefined	-0.065	-0.452	0.914	1.740	3.813	0.424	7607.706	345.932	0.000	Undefined	7.461	Undefined
NATIVE_0000127.LAB	2/13/2020	10:24:24	150.3	0.998	0.267	1.451	-61.435	Undefined	-0.061	-0.452	0.947	1.733	3.804	0.427	7617.649	345.151	0.000	Undefined	7.305	Undefined
NATIVE_0000128.LAB	2/13/2020	10:24:39	150.3	0.998	0.332	1.537	-52.389	Undefined	-0.052	-0.448	0.942	1.752	3.802	0.414	7603.893	353.493	0.000	Undefined	7.578	Undefined
NATIVE_0000129.LAB	2/13/2020	10:24:53	150.4	0.995	0.237	1.508	-58.727	Undefined	-0.059	-0.454	0.906	1.740	3.814	0.427	7641.752	349.430	0.000	Undefined	7.500	Undefined
SPIKE_0000130.LAB	2/13/2020	10:25:20	150.3	0.995	0.266	1.530	-51.061	Undefined	-0.051	-0.456	0.863	1.764	3.823	0.421	7629.549	360.863	0.000	Undefined	7.617	Undefined
SPIKE_0000131.LAB	2/13/2020	10:25:35	150.2	0.999	0.303	1.481	-52.706	Undefined	-0.053	-0.454	0.926	1.741	3.797	0.429	7597.157	345.445	0.000	Undefined	7.383	Undefined
SPIKE_0000132.LAB	2/13/2020	10:25:50	150.3	0.999	0.270	1.473	-57.309	Undefined	-0.057	-0.454	0.915	1.739	3.827	0.425	7596.820	346.019	0.000	Undefined	7.383	Undefined
SPIKE_0000133.LAB	2/13/2020	10:26:04	150.2	0.998	0.228	1.375	11.227	Undefined	0.011	0.479	0.931	1.757	12.290	0.551	6897.079	355.964	0.000	Undefined	7.578	Undefined
SPIKE_0000134.LAB	2/13/2020	10:26:19	150.3	0.998	14.730	4.219	214.016	Undefined	0.214	0.853	0.925	4.260	46.051	2.029	7013.788	934.219	0.000	Undefined	7.383	Undefined
SPIKE_0000135.LAB	2/13/2020	10:26:34	150.2	0.999	27.192	8.043	373.731	Undefined	0.374	1.157	0.682	7.251	73.061	3.203	7039.965	1650.460	0.000	Undefined	7.578	Undefined
SPIKE_0000136.LAB	2/13/2020	10:26:48	150.1	0.995	36.297	3.189	103.947	Undefined	0.104	0.453	0.589	2.268	6.021	0.429	7158.301	463.341	0.000	Undefined	7.383	Undefined
SPIKE_0000137.LAB	2/13/2020	10:27:03	150.3	0.998	36.499	3.170	78.589	Undefined	0.079	0.436	0.540	2.236	4.706	0.406	7153.690	445.829	0.000	Undefined	7.578	Undefined
SPIKE_0000138.LAB	2/13/2020	10:27:18	150.1	0.998	36.711	3.148	93.731	Undefined	0.094	0.432	0.585	2.219	4.431	0.407	7138.037	444.517	0.000	Undefined	7.539	Undefined
SPIKE_0000139.LAB	2/13/2020	10:27:32	150.2	0.999	36.678	3.325	100.677	Undefined	0.101	0.436	0.588	2.275	4.248	0.406	7136.060	448.943	0.000	Undefined	7.344	Undefined
SPIKE_0000140.LAB	2/13/2020	10:27:47	150.1	0.997	37.643	3.203	116.805	Undefined	0.117	0.437	0.594	2.227	4.163	0.407	7133.566	446.762	0.000	Undefined	7.539	Undefined
SPIKE_0000141.LAB	2/13/2020	10:28:02	150.2	0.997	38.963	3.318	121.136	Undefined	0.121	0.435	0.576	2.263	4.090	0.408	7119.904	449.331	0.000	Undefined	7.422	Undefined
SPIKE_0000142.LAB	2/13/2020	10:28:17	150.1	0.999	38.963	3.388	127.110	Undefined	0.127	0.430	0.542	2.291	3.992	0.404	7086.316	474.498	0.000	Undefined	7.095	Undefined
SPIKE_0000143.LAB	2/13/2020	10:28:31	150.3	0.997	44.634	3.353	173.713	Undefined	0.174	0.427	0.592	2.253	3.977	0.393	7058.339	450.244	0.000	Undefined	7.500	Undefined
SPIKE_0000144.LAB	2/13/2020	10:28:46	150.1	0.996	48.404	3.450	183.037	Undefined	0.183	0.427	0.556	2.268	3.898	0.409	6999.159	455.358	0.000	Undefined	7.188	Undefined
SPIKE_0000145.LAB	2/13/2020	10:29:01	150.1	0.998	48.392	3.445	179.585	Undefined	0.180	0.423	0.605	2.261	4.001	0.402	6990.514	448.293	0.000	Undefined	7.461	Undefined
SPIKE_0000146.LAB	2/13/2020	10:29:15	150.3	0.996	48.508	3.399	194.965	Undefined	0.195	0.416	0.603	2.243	3.841	0.400	7006.736	450.649	0.000	Undefined	7.148	Undefined
ZERO DIRECT_S001_0000001.LAB	2/13/2020	10:30:41	150.2	0.998	0.328	1.479	-56.415	Undefined	-0.056	-0.455	0.906	1.737	3.805	0.417	7613.800	344.739	0.000	Undefined	7.266	Undefined
ZERO DIRECT_S001_0000002.LAB	2/13/2020	10:31:40	150.1	0.998	0.447	1.540	-61.432	Undefined	-0.061	-0.454	0.912	1.768	3.803	0.430	7595.604	374.328	0.000	Undefined	7.422	Undefined
ZERO DIRECT_S001_0000003.LAB	2/13/2020	10:32:39	150.4	0.998	0.629	1.638	-61.594	Undefined	-0.062	-0.454	0.862	1.809	3.808	0.431	7613.142	439.090	0.000	Undefined	7.617	Undefined
ZERO DIRECT_S001_0000004.LAB	2/13/2020	10:33:38	150.2	0.996	0.674	1.687	-60.319	Undefined	-0.060	-0.456	0.854	1.838	3.809	0.435	7631.704	454.958	0.000	Undefined	7.461	Undefined
ZERO DIRECT_S001_0000005.LAB	2/13/2020	10:34:37	150.4	0.995	0.752	1.706	-63.303	Undefined	-0.063	-0.460	0.813	1.847	3.866	0.441	7630.842	468.962	0.000	Undefined	7.656	Undefined
ZERO DIRECT_S001_0000006.LAB	2/13/2020	10:35:35	150.5	0.996	0.691	1.690	-56.387	Undefined	-0.056	-0.456	0.835	1.827	4.021	0.433	7615.177	454.646	0.000	Undefined	7.656	Undefined
ZERO DIRECT_S001_0000007.LAB	2/13/2020	10:36:34	150.4	0.996	0.730	1.713	-58.847	Undefined	-0.059	-0.457	0.809	1.836	3.969	0.438	7612.142	468.456	0.000	Undefined	7.266	Undefined
ZERO DIRECT_S001_0000008.LAB	2/13/2020	10:37:33	150.4	0.997	0.787	1.733	-59.407	Undefined	-0.059	-0.457	0.777	1.844	3.894	0.434	7606.234	501.940	0.000	Undefined	7.578	Undefined
ZERO DIRECT_S002_0000001.LAB	2/13/2020	12:08:32	150.1	0.996	1.886	2.024	12.997	Undefined	0.013	0.590	0.801	2.297	20.278	0.759	7448.550	580.920	0.000	Undefined	7.461	Undefined

ZERO DIRECT_S002_0000002.LAB	2/13/2020	12:09:31	150.3	1.000	1.819	1.970	12.065	Undefined	0.012	0.584	0.812	2.260	19.876	0.745	7392.044	572.089	0.000	Undefined	7.695	Undefined
ZERO DIRECT_S002_0000003.LAB	2/13/2020	12:10:30	150.2	0.997	1.874	1.988	14.665	Undefined	0.015	0.585	0.808	2.270	20.217	0.750	7374.598	576.625	0.000	Undefined	7.461	Undefined
ZERO DIRECT_S002_0000004.LAB	2/13/2020	12:11:28	150.3	1.000	1.872	1.966	14.279	Undefined	0.014	0.572	0.817	2.217	20.248	0.740	7083.054	565.782	0.000	Undefined	7.422	Undefined
ZERO DIRECT_S002_0000005.LAB	2/13/2020	12:12:27	150.1	0.999	1.854	1.946	10.485	Undefined	0.010	0.568	0.818	2.211	19.933	0.737	7087.638	567.774	0.000	Undefined	7.891	Undefined
NATIVE_S003_0000100.LAB	2/13/2020	15:08:52	150.2	0.998	2.130	2.245	17.819	Undefined	0.018	0.686	0.790	2.665	21.254	0.841	9392.764	676.964	0.000	Undefined	7.617	Undefined
NATIVE_S003_0000101.LAB	2/13/2020	15:09:07	150.1	0.998	2.088	2.225	7.522	Undefined	0.008	0.688	0.748	2.673	21.513	0.865	9400.881	683.345	0.000	Undefined	7.539	Undefined
NATIVE_S003_0000102.LAB	2/13/2020	15:09:22	150.1	0.998	2.115	2.285	2.382	Undefined	0.002	0.683	0.751	2.670	21.504	0.857	9404.100	678.751	0.000	Undefined	7.695	Undefined
NATIVE_S003_0000103.LAB	2/13/2020	15:09:37	150.3	1.002	2.004	2.332	19.214	Undefined	0.019	0.680	0.733	2.671	21.131	0.849	9374.161	682.636	0.000	Undefined	7.500	Undefined
NATIVE_S003_0000104.LAB	2/13/2020	15:09:51	150.1	0.999	2.061	2.331	-1.303	Undefined	-0.001	-0.676	0.796	2.669	21.117	0.831	9403.591	669.141	0.000	Undefined	7.695	Undefined
NATIVE_S003_0000105.LAB	2/13/2020	15:10:06	150.1	1.001	2.085	2.333	16.843	Undefined	0.017	0.680	0.750	2.673	21.080	0.851	9393.646	687.727	0.000	Undefined	7.578	Undefined
NATIVE_S003_0000106.LAB	2/13/2020	15:10:21	150.1	0.999	2.116	2.323	16.827	Undefined	0.017	0.673	0.760	2.653	21.219	0.847	9388.849	693.532	0.000	Undefined	7.813	Undefined
NATIVE_S003_0000107.LAB	2/13/2020	15:10:35	150.3	0.998	2.144	2.310	11.353	Undefined	0.011	0.691	0.781	2.683	21.550	0.861	9407.625	667.931	0.000	Undefined	7.656	Undefined
SPIKE_S003_0000108.LAB	2/13/2020	15:10:50	150.1	1.000	2.086	2.287	10.856	Undefined	0.011	0.687	0.740	2.664	21.539	0.859	9389.056	669.114	0.000	Undefined	7.578	Undefined
SPIKE_S003_0000109.LAB	2/13/2020	15:11:05	150.2	1.002	29.335	2.325	293.453	Undefined	0.293	0.648	1.077	2.473	20.047	0.797	8895.715	662.053	0.000	Undefined	7.891	Undefined
SPIKE_S003_0000110.LAB	2/13/2020	15:11:19	150.2	1.001	45.510	4.346	285.469	Undefined	0.285	0.786	0.507	3.547	34.676	1.267	8750.441	790.189	0.000	Undefined	7.656	Undefined
SPIKE_S003_0000111.LAB	2/13/2020	15:11:34	150.2	1.002	47.649	4.427	159.001	Undefined	0.159	0.677	0.422	3.209	23.172	0.880	8711.324	841.637	0.000	Undefined	7.383	Undefined
SPIKE_S003_0000112.LAB	2/13/2020	15:11:49	150.1	0.999	50.316	4.278	114.127	Undefined	0.114	0.650	0.440	3.080	20.298	0.807	8664.948	759.284	0.000	Undefined	7.773	Undefined
SPIKE_S003_0000113.LAB	2/13/2020	15:12:04	150.2	1.002	50.603	4.499	136.310	Undefined	0.136	0.649	0.575	3.103	19.925	0.767	8628.639	683.384	0.000	Undefined	7.422	Undefined
SPIKE_S003_0000114.LAB	2/13/2020	15:12:18	150.1	1.001	49.763	4.187	155.890	Undefined	0.156	0.649	0.353	3.009	19.755	0.772	8603.243	668.111	0.000	Undefined	7.813	Undefined
SPIKE_S003_0000115.LAB	2/13/2020	15:12:33	150.1	1.001	46.223	4.060	231.295	Undefined	0.231	0.628	0.379	3.014	19.357	0.795	8711.336	720.037	0.000	Undefined	7.539	Undefined
SPIKE_S003_0000116.LAB	2/13/2020	15:12:48	150.2	1.001	46.200	4.380	284.413	Undefined	0.284	0.625	0.505	3.092	19.298	0.786	8681.464	692.035	0.000	Undefined	7.617	Undefined
SPIKE_S003_0000117.LAB	2/13/2020	15:13:02	150.1	1.001	45.934	4.093	346.917	Undefined	0.347	0.638	0.422	3.005	19.179	0.759	8671.992	693.190	0.000	Undefined	7.695	Undefined
SPIKE_S003_0000118.LAB	2/13/2020	15:13:17	150.2	0.998	46.064	4.431	396.158	Undefined	0.396	0.658	0.495	3.148	19.716	0.781	8688.368	700.214	0.000	Undefined	7.500	Undefined
SPIKE_S003_0000119.LAB	2/13/2020	15:13:32	150.1	1.002	45.595	4.262	413.836	Undefined	0.414	0.632	0.461	3.071	19.546	0.778	8667.503	698.355	0.000	Undefined	7.773	Undefined
SPIKE_S003_0000120.LAB	2/13/2020	15:13:47	150.3	1.000	45.871	4.258	417.038	Undefined	0.417	0.648	0.391	3.091	19.600	0.773	8684.354	731.093	0.000	Undefined	7.734	Undefined
SAMPLE_S003_0000121.LAB	2/13/2020	15:15:18	150.2	1.002	2.146	2.304	19.334	Undefined	0.019	0.686	0.728	2.680	21.384	0.856	9359.652	668.569	0.000	Undefined	7.422	Undefined
SAMPLE_S003_0000122.LAB	2/13/2020	15:16:16	150.2	1.002	2.158	2.262	15.908	Undefined	0.016	0.676	0.742	2.651	21.348	0.849	9352.789	687.287	0.000	Undefined	7.578	Undefined
SPIKE_S003_0000123.LAB	2/13/2020	15:18:31	150.4	1.000	46.084	4.137	241.056	Undefined	0.241	0.632	0.440	3.008	19.296	0.775	8672.191	672.231	0.000	Undefined	7.656	Undefined
SPIKE_S003_0000124.LAB	2/13/2020	15:18:45	150.3	1.002	45.892	4.133	233.138	Undefined	0.233	0.635	0.419	2.993	19.322	0.758	8638.804	681.483	0.000	Undefined	7.500	Undefined
SPIKE_S003_0000125.LAB	2/13/2020	15:19:00	150.4	1.000	46.065	4.253	228.806	Undefined	0.229	0.636	0.392	3.051	19.452	0.770	8669.997	683.583	0.000	Undefined	7.656	Undefined
SPIKE_S003_0000126.LAB	2/13/2020	15:19:15	150.4	1.002	46.018	4.177	213.460	Undefined	0.213	0.635	0.446	3.014	19.133	0.762	8648.863	683.273	0.000	Undefined	7.578	Undefined
NATIVE_S003_0000127.LAB	2/13/2020	15:19:29	150.4	1.000	25.519	3.226	121.683	Undefined	0.122	0.647	0.596	2.784	19.730	0.798	8960.363	642.867	0.000	Undefined	7.383	Undefined
NATIVE_S003_0000128.LAB	2/13/2020	15:19:44	150.5	0.999	2.168	2.225	9.742	Undefined	0.010	0.670	0.736	2.627	20.732	0.837	9375.484	653.701	0.000	Undefined	7.617	Undefined
NATIVE_S003_0000129.LAB	2/13/2020	15:19:59	150.3	1.000	2.111	2.167	5.937	Undefined	0.006	0.668	0.749	2.585	20.796	0.830	9353.553	655.458	0.000	Undefined	7.500	Undefined
NATIVE_S003_0000130.LAB	2/13/2020	15:20:14	150.4	0.999	2.059	2.194	9.724	Undefined	0.010	0.675	0.750	2.616	20.921	0.844	9380.915	657.528	0.000	Undefined	7.617	Undefined
NATIVE_S003_0000131.LAB	2/13/2020	15:20:28	150.5	0.999	2.143	2.301	12.754	Undefined	0.013	0.676	0.755	2.642	21.049	0.840	9383.760	672.758	0.000	Undefined	7.734	Undefined
NATIVE_S003_0000132.LAB	2/13/2020	15:20:43	150.3	1.001	2.066	2.154	1.281	Undefined	0.001	0.672	0.748	2.598	20.631	0.825	9355.793	655.988	0.000	Undefined	7.461	Undefined
NATIVE_S003_0000133.LAB	2/13/2020	15:20:58	150.3	1.000	2.046	2.298	13.571	Undefined	0.014	0.669	0.769	2.628	20.855	0.828	9358.939	656.308	0.000	Undefined	7.813	Undefined
NATIVE_S003_0000134.LAB	2/13/2020	15:21:12	150.3	0.998	2.101	2.245	14.743	Undefined	0.015	0.675	0.758	2.631	20.999	0.848	9378.448	656.612	0.000	Undefined	7.656	Undefined
SPIKE_S003_0000135.LAB	2/13/2020	15:21:40	150.4	0.998	70.804	3.094	336.412	Undefined	0.336	0.625	0.937	2.504	18.700	0.743	8228.364	612.451	0.000	Undefined	7.539	Undefined
SPIKE_S003_0000136.LAB	2/13/2020	15:21:55	150.2	0.998	46.011	4.170	214.945	Undefined	0.215	0.652	0.425	3.059	20.827	0.809	8674.229	687.818	0.000	Undefined	7.500	Undefined
SPIKE_S003_0000137.LAB	2/13/2020	15:22:09	150.4	1.002	45.948	4.108	204.701	Undefined	0.205	0.646	0.450	3.007	19.665	0.771	8637.327	675.324	0.000	Undefined	7.500	Undefined
SPIKE_S003_0000138.LAB	2/13/2020	15:22:24	150.3	1.001	46.040	4.054	195.847	Undefined	0.196	0.637	0.403	2.973	19.583	0.768	8643.245	673.453	0.000	Undefined	7.539	Undefined
SPIKE_S003_0000139.LAB	2/13/2020	15:22:39	150.4	1.002	46.065	4.099	210.923	Undefined	0.211	0.639	0.404	3.001	19.322	0.773	8638.025	662.456	0.000	Undefined	7.734	Undefined
NATIVE_S003_0000140.LAB	2/13/2020	15:22:53	150.4	1.001	7.203	2.306	44.916	Undefined	0.045	0.664	0.535	2.584	20.518	0.811	9239.927	621.176	0.000	Undefined	7.461	Undefined
NATIVE_S003_0000141.LAB	2/13/2020	15:23:08	150.3	1.002	2.194	2.229	17.419	Undefined	0.017	0.679	0.756	2.637	20.834	0.853	9333.327	668.047	0.000	Undefined	7.695	Undefined
NATIVE_S003_0000142.LAB	2/13/2020	15:23:23	150.4	1.002	2.160	2.311	14.302	Undefined	0.014	0.680	0.752	2.671	21.396	0.859	9335.395	669.962	0.000	Undefined	7.695	Undefined
NATIVE_S003_0000143.LAB	2/13/2020	15:23:37	150.4	1.000	2.162	2.352	16.091	Undefined	0.016	0.683	0.775	2.693	21.897	0.867	9357.488	665.724	0.000	Undefined	7.656	Undefined
NATIVE_S003_0000144.LAB	2/13/2020	15:23:52	150.2	1.000	2.343	2.337	18.703	Undefined	0.019	0.685	0.754	2.693	22.090	0.873	9340.475	673.582	0.000	Undefined	7.773	Undefined
SPIKE_S003_0000145.LAB	2/13/2020	15:24:07	150.2	1.002	61.754	2.746	291.156	Undefined	0.291	0.619	0.984	2.411	19.095	0.738	8303.499	601.974	0.000	Undefined	7.695	Undefined
SPIKE_S003_0000146.LAB	2/13/2020	15:24:22	150.4	1.001	46.099	4.111	204.017	Undefined	0.204	0.645	0.422	3.029	20.269	0.791	8642.732	670.461	0.000	Undefined	7.891	Undefined
SPIKE_S003_0000147.LAB	2/13/2020	15:24:36	150.4	1.000	46.104	4.101	199.696	Undefined	0.200	0.647	0.402	3.025	20.403	0.804	8652.085	695.682	0.000	Undefined	7.695	Undefined
NATIVE_S003_0000148.LAB	2/13/2020	15:24:51	150.4	1.001	45.975	4.184	195.685	Undefined	0.196	0.648	0.466	3.032	19.912	0.779	8649.103	668.670	0.000	Undefined	7.461	Undefined
NATIVE_S003_0000149.LAB	2/13/2020	15:25:06	150.3	1.001	5.753	2.440	47.756	Undefined	0.048	0.680	0.739	2.686	21.278	0.856	9268.643	663.760	0.000	Undefined	7.539	Undefined
NATIVE_S003_0000150.LAB	2/13/2020	15:25:20	150.2	0.998	2.240	2.260	24.980	Undefined	0.025	0.683	0.721	2.668	21.504	0.860	9364.912	664.173	0.000	Undefined	7.539	Undefined
NATIVE_S003_0000151.LAB	2/13/2020	15:25:35	150.4	0.999	2.136	2.280	14.942	Undefined	0.015	0.689	0.751	2.685	21.628	0.879	9369.654	661.215	0.000	Undefined	7.344	Undefined
NATIVE_S003_0000152.LAB	2/13/2020	15:25:50	150.4	1.002	2.221	2.305	10.252	Undefined	0.010	0.682	0.762	2.676	21.840	0.880	9346.126	646.159	0.000	Undefined	7.656	Undefined
NATIVE_S003_0000153.LAB	2/13/2020	15:26:05	150.3	1.002	2.128	2.328	17.522	Undefined	0.018	0.679	0.770	2.679	21.834	0.863	9339.330	652.986	0.000	Undefined	7.461	Undefined
NATIVE_S003_0000154.LAB	2/13/2020	15:26:19	150.4	1.001	2.171	2.300	23.395	Undefined	0.023	0.682	0.734	2.680	21.982	0.875	9351.931	659.230	0.000	Undefined	7.773	Undefined
SPIKE_S003_0000155.LAB	2/13/2020	15:26:49	150.3	0.998	70.641	3.144	323.911	Undefined	0.324	0.616	1.024	2.505	19.205	0.753	8239.897	620.075	0.000	Undefined	7.852	Undefined
SPIKE_S003_0000156.LAB	2/13/2020	15:27:04	150.4	1.001	46.075	4.106	202.148	Undefined	0.202	0.649	0.439	3.048	20.679	0.812	8641.305	673.795	0.000	Undefined	7.422	Undefined
SPIKE_S003_0000157.LAB	2/13/2020	15:27:19	150.4	1.000	46.279	4.121	201.933	Undefined	0.202	0.642	0.446	3.024	20.583	0.809	8643.548	677.650	0.000	Undefined	7.617	Undefined
SPIKE_S003_0000158.LAB	2/13/2020	15:27:33	150.2	1.002	46.243	4.050	203.294	Undefined	0.203	0.640	0.482	2.993	20.081	0.798	8627.219	680.250	0.000	Undefined	7.617	Undefined
NATIVE_S003_0000159.LAB	2/13/2020	15:27:48	150.4	1.001	21.019	2.978	103.593	Undefined	0.104	0.659	0.557	2.762	20.867	0.834	8996.247	650.422	0.000	Undefined	7.539	Undefined
NATIVE_S003_0000160.LAB	2/13/2020	15:28:03	150.3	1.002	2.251	2.272	21.176	Undefined	0.021	0.676	0.767	2.640	21.187	0.847	9315.048	645.553	0.000	Undefined	7.500	Undefined
NATIVE_S003_0000161.LAB	2/13/2020	15:28:17	150.4	0.998	2.260	2.243	20.164	Undefined	0.020	0.687	0.745	2.663	21.782	0.868	9374.217	668.834	0.000	Undefined	7.422	Undefined
SPIKE_S003_0000162.LAB	2/13/2020	15:28:46	150.1	1.002	2.069	2.231	13.552	Undefined	0.014	0.679	0.741	2.654	21.727	0.870	9312.449	667.546	0.000	Undefined	7.773	Undefined
SPIKE_S003_0000163.LAB	2/13/2020	15:29:00	150.4	1.002	63.293	2.733	291.888	Undefined	0.292	0.637	1.076	2.415	18.589	0.741	8275.929	626.698	0.000	Undefined	7.500	Undefined
SPIKE_S003_0000164.LAB	2/13/2020	15:29:15	150.2	1.000	46.154	4.062	203.047	Undefined	0.203	0.644	0.442	3.004	20.021	0.789	8626.676	674.149	0.000	Undefined	7.500	Undefined
NATIVE_S003_0000165.LAB	2/13/2020	15:29:30	150.2	1.002	46.190	4.178	203.930	Undefined	0.204	0.648	0.411	3.035	20.146	0.804	8615.126	672.651	0.000	Undefined	7.773	Undefined
NATIVE_S003_0000166.LAB	2/13/2020	15:29:44	150.4	1.000	25.777	3.348	119.266	Undefined	0.119	0.657	0.557	2.780	20.318	0.820	8919.511	633.023	0.000	Undefined	7.305	Undefined
NATIVE_S003_0000167.LAB	2/13/2020	15:29:59	150.1	1.001	2.285	2.235	19.408	Undefined	0.019	0.674	0.768	2.647	21.511	0.874	9308.106	668.865	0.000	Undefined	7.852	Undefined
NATIVE_S003_0000168.LAB	2/13/2020	15:30:14	150.5	0.999	2.128	2.295	12.928	Undefined	0.013	0.685	0.745	2.650	21.306	0.861	9351.369	650.458	0.000	Undefined	7.578	Undefined
CTS SYSTEM_S003_0000169.LAB	2/13/2020	15:30:29	150.4	1.000	2.114	2.281	17.751	Undefined	0.018	0.677	0.772	2.649	21.187	0.858	9343.442	664.508	0.000	Undefined	7.813	Undefined
SPIKE_S003_0000170.LAB	2/13/2020	15:30:43	150.2	1.000	67.672	2.871	302.604	Undefined	0.303	0.618	1.008	2.442	18.514	0.741	8219.454	619.464	0.000	Undefined	7.773	Undefined
SPIKE_S003_0000171.LAB	2/13/2020	15:30:58	150.3	1.001	46.174	4.138	206.082	Undefined	0.206	0.647	0.417	3.039	20.212	0.799	8634.389	682.892	0.000	Undefined	7.813	Undefined
SPIKE_S003_0000172.LAB	2/13/2020	15:31:13	150.2	1.002	46.178	4.204	205.558	Undefined	0.206	0.641	0.467	3.047	20.410	0.807	8607.404	683.282	0.000	Undefined	7.852	Undefined
SPIKE_S003_0000173.LAB	2/13/2020	15:31:27	150.5	1.002	46.351	4.089	214.844	Undefined	0.215	0.647	0.489	3.009	19.907	0.792	8612.075	671.555	0.000	Undefined	7.539	Undefined
NATIVE_S003_0000174.LAB	2/13/2020	15:31:42	150.2	0.998	46.405	4.173	197.518	Undefined	0.198	0.641	0.442	3.040	19.728	0.795	8641.865	669.680	0.000	Undefined	7.734	Undefined
NATIVE_S003_0000175.LAB	2/13/2020	15:31:57	150.4	0.999	24.062	3.038	121.390	Undefined	0.121	0.665	0.577	2.781	20.876	0.833	8967.628	648.786	0.000	Undefined	7.500	Undefined
NATIVE_S003_0000176.LAB	2/13/2020	15:32:11	150.4	1.002	2.308	2.326	15.235	Undefined	0.015	0.682	0.771	2.683	21.960	0.877	9318.454	670.117	0.000	Undefined	7.422	Undefined

NATIVE_S003_0000177.LAB	2/13/2020	15:32:26	150.4	1.002	2.265	2.350	19.561	Undefined	0.020	0.686	0.745	2.680	21.865	0.867	9324.193	665.394	0.000	Undefined	7.656	Undefined
NATIVE_S003_0000178.LAB	2/13/2020	15:32:41	150.4	1.002	2.147	2.260	22.386	Undefined	0.022	0.678	0.765	2.651	21.390	0.860	9323.126	656.684	0.000	Undefined	7.500	Undefined

USEPA Method 301-Sec. 12.0
Analyte Spiking
Statistical Analysis and Performance Criteria

MONTROSE AIR QUALITY SERVICES

Candidate: Montrose Starboost 3644-Waukegan, IL
Date: 3/5/2020
Tracer Gas: 513.9 ppm v Ethane
Spike Gas: 2.286 ppm v Ethylene Oxide

Test Run Number	Date	Spiked Spectra#	Native Spectra#	Spiked Results ppm v Ethylene Oxide 0.2486	Native Results ppm v Ethylene Oxide M_i	Difference (S_i-M_i) d_i	Difference Squared d_i^2	Tracer Conc. ppm v	Dilution Factor DF	Calc'd. 1-DF	Diluted Spike Conc. ppb v CS	Intermed. Calc. $(1-DF*M_i)$	Theo. Spike Conc. ppb v VS	Recovery %R
1	3/5/2020	61	65	0.238	0.036	0.20	0.04	51.119	0.0995	0.9005	0.23	0.0325	0.26	91.4%
2	3/5/2020	71	77	0.247	0.044	0.20	0.04	50.853	0.0990	0.9010	0.23	0.0399	0.27	92.9%
3	3/5/2020	80	86	0.235	0.039	0.20	0.04	51.268	0.0998	0.9002	0.23	0.0353	0.26	89.2%
			Mean of valid test runs:	**0.240**	**0.040**	**0.20**	**0.04**				**0.23**		**0.26**	**91.16%**

*** data omitted from calculations**

Number of test runs used in comparison:

n = **3** **test runs**

t value @ "n" runs (Table 301-3):

$t_{0.95}$ = **4.303**

Sum of Differences:

$\sum_{i}^{n} d_i$ = **0.6000**

Sum of Squared Differences:

$\sum_{i}^{n} d_i^2$ = **0.1200**

Bias Analysis: Bias (Eq.301-18 derivative)

$d_i = \frac{(S_{1_i}+S_{2_i})}{2} - \frac{(M_{1_i}+M_{2_i})}{2} - CS$ **Or** $d_i = \overline{S_i} - \overline{M_i} - VS$ = **-0.0631**

Bias Analysis: Numerical Bias (Eq. 301-19):

$B = \frac{\sum_{i}^{n} d_i}{n}$ = **-0.0631**

Bias Analysis: Standard Deviation of the Differences (Eq. 301-20):

$SD_d = \sqrt{\frac{\sum_{i}^{n}(d_i - d_m)^2}{(n-1)}}$ = **0.2829**

Bias Analysis: T-Test @ 95% (Eq. 301-21, where $t < t_{0.95}$):

$t = \frac{|d_m|}{\left(\frac{SD_d}{\sqrt{n}}\right)}$ = **3.6742** **bias is insignificant**

Bias Analysis: Relative Bias (Eq. 301-22, where B_R <10%):

$B_R = \left|\frac{B}{VS}\right| \times 100\%$ = **23.99%** **apply Bias Correction Factor**

Bias Analysis: Bias Correction Factor (Eq. 301-8):

$CF = \left(\frac{1}{1+\frac{B}{CS}}\right)$ = **1.32**

Precision Assessment: Precision Test Standard Deviation (Eq. 301-23):

$SD = \sqrt{\frac{\sum_{i}^{n}(s_i - s_m)^2}{(n-1)}}$ = **0.0066**

Precision Assessment: Relative Standard Deviation (Eq.301-9 where RSD <20%)

$RSD = \left(\frac{SD}{S_m}\right) \times 100\%$ = **2.74%** **acceptable**

% Spike Recovery (70%< %R <130%):

$\%R = \left(\frac{SD}{S_m}\right) \times 100\%$ = **91.16%**

Reference Monitor Detection Limits

Monitor: Starboost FTIR
Manufacturer: MKS/MAX
Model: Starboost Model #2030DGB2EZKS13T
S/N: 18683644
Condition: Instrument Only: 20.0 ppb MDL Analysis
Date: 2/12/2020
Operator: WC James
Compound: Ethylene Oxide

Target Concentration, ppm v 0.0200

Repetition	Average FTIR Reading (ppm v)
1	0.016
2	0.017
3	0.018
4	0.019
5	0.014
6	0.014
7	0.016
8	0.011
9	0.016
10	0.014
11	0.013
12	0.014

Total Population	**12**
t-Test Population (n-1)	**11**
Average RM reading	**0.02**
Standard Deviation	**0.0023**
Student t- Test Value	**2.718**

MDL (LOD)	**0.00617**	= 6.17 ppb
PQL (LOQ) (3 x MDL)	**0.019**	

The USEPA defines MDL as "the minimum concentration that can be determined with 99% confidence that the true concentration is greater than zero." This procedure is outlined in 40CFR 136 and TTN EMC.
The NELAC Standard (TNI) define detection limits as limit of detection - LOD and limit of quantification - LOQ.
These terms were historically known as method detection limit - MDL and practical quantification limit - PQL.

Student t-Test Values	
t-Test Population	t-Test Value
7	2.998
8	2.896
9	2.821
10	2.764
11	2.718
12	2.681

MONTROSE AIR QUALITY SERVICES

Spectrum	Date	Time	Temp	Pressure	Ethane [150C] [74-84-0] [2x8cm-1] [Aromatics Filter]		Ethylene Oxide [150C] [75-21-8] [2x8cm-1] [Aromatics Filter]		Filter Interference 5.LAB		Methane [150C] [74-82-8] [2x8cm-1] [Aromatics Filter] [SN110281261]		Water [150C] [7732-18-5] [2x8cm-1] [Aromatics Filter] [SN110281261]		MAX.MKS.BADSCANCOUNT		MAX.MKS.LASERPP		
			(C)	(ATM)	Con (ppm)	MDC#3 (ppm)	Con (ppm)	MDC#3 (ppm)	Con (ppm)	MDC#3 (ppm)	Con (ppm)	MDC#3 (ppm)	Con (ppm)	MDC#3 (ppm)	Con (ppm)	MDC#3 (ppm)	Con (ppm)	MDC#3 (ppm)	
SAMPLE_S002_0000059.LAB	2/12/2020	11:13:04	150.4	0.998	0.111	0.181	0.010	0.013	0.917	0.120	0.011	0.029	3.764	80.385	0.000	Undefined	7.695	Undefined	
SAMPLE_S002_0000060.LAB	2/12/2020	11:14:03	150.2	0.998	0.125	0.227	0.019	0.012	0.948	0.144	0.005	0.029	2.411	83.254	0.000	Undefined	7.734	Undefined	
SAMPLE_S002_0000061.LAB	2/12/2020	11:15:02	150.4	0.998	0.105	0.141	0.014	0.015	0.913	0.104	-0.002	-0.034	-0.345	-88.912	0.000	Undefined	7.578	Undefined	
SAMPLE_S002_0000062.LAB	2/12/2020	11:16:01	150.3	0.998	0.117	0.153	0.016	0.012	0.925	0.110	0.012	0.031	4.478	74.025	0.000	Undefined	7.656	Undefined	20.0 ppb MDL Determination
SAMPLE_S002_0000063.LAB	2/12/2020	11:17:00	150.4	0.998	0.134	0.243	0.017	0.012	0.931	0.151	0.003	0.036	-0.836	-90.653	0.000	Undefined	7.383	Undefined	20.0 ppb MDL Determination
SAMPLE_S002_0000064.LAB	2/12/2020	11:17:58	150.4	0.998	0.100	0.189	0.018	0.010	0.920	0.125	0.004	0.034	2.743	91.795	0.000	Undefined	7.539	Undefined	20.0 ppb MDL Determination
SAMPLE_S002_0000065.LAB	2/12/2020	11:18:57	150.4	0.998	0.103	0.185	0.019	0.013	0.917	0.125	0.002	0.034	0.208	86.275	0.000	Undefined	7.656	Undefined	20.0 ppb MDL Determination
SAMPLE_S002_0000066.LAB	2/12/2020	11:19:56	150.3	0.998	0.137	0.179	0.014	0.013	0.902	0.121	0.001	0.030	1.443	77.948	0.000	Undefined	7.461	Undefined	20.0 ppb MDL Determination
SAMPLE_S002_0000067.LAB	2/12/2020	11:20:55	150.1	0.998	0.140	0.176	0.014	0.013	0.906	0.119	0.006	0.033	3.191	96.263	0.000	Undefined	7.695	Undefined	20.0 ppb MDL Determination
SAMPLE_S002_0000068.LAB	2/12/2020	11:21:54	150.4	0.998	0.149	0.193	0.016	0.010	0.926	0.125	0.009	0.032	0.472	70.550	0.000	Undefined	7.734	Undefined	20.0 ppb MDL Determination
SAMPLE_S002_0000069.LAB	2/12/2020	11:22:52	150.3	0.998	0.086	0.193	0.011	0.010	0.915	0.125	0.006	0.035	6.225	82.956	0.000	Undefined	7.461	Undefined	20.0 ppb MDL Determination
SAMPLE_S002_0000070.LAB	2/12/2020	11:23:51	150.3	0.998	0.108	0.144	0.016	0.011	0.913	0.112	0.008	0.038	6.872	89.319	0.000	Undefined	7.734	Undefined	20.0 ppb MDL Determination
SAMPLE_S002_0000071.LAB	2/12/2020	11:24:50	150.3	0.998	0.122	0.193	0.014	0.011	0.917	0.126	0.011	0.033	-0.065	-74.369	0.000	Undefined	7.656	Undefined	20.0 ppb MDL Determination
SAMPLE_S002_0000072.LAB	2/12/2020	11:25:49	150.5	0.998	0.116	0.188	0.013	0.014	0.910	0.127	-0.001	-0.038	6.072	77.520	0.000	Undefined	7.539	Undefined	20.0 ppb MDL Determination
SAMPLE_S002_0000073.LAB	2/12/2020	11:26:48	150.3	0.998	0.140	0.206	0.014	0.013	0.905	0.132	0.011	0.037	1.584	77.327	0.000	Undefined	7.617	Undefined	20.0 ppb MDL Determination
SAMPLE_S002_0000074.LAB	2/12/2020	11:27:46	150.4	0.998	0.103	0.174	0.013	0.014	0.907	0.124	0.008	0.038	4.060	93.297	0.000	Undefined	7.734	Undefined	

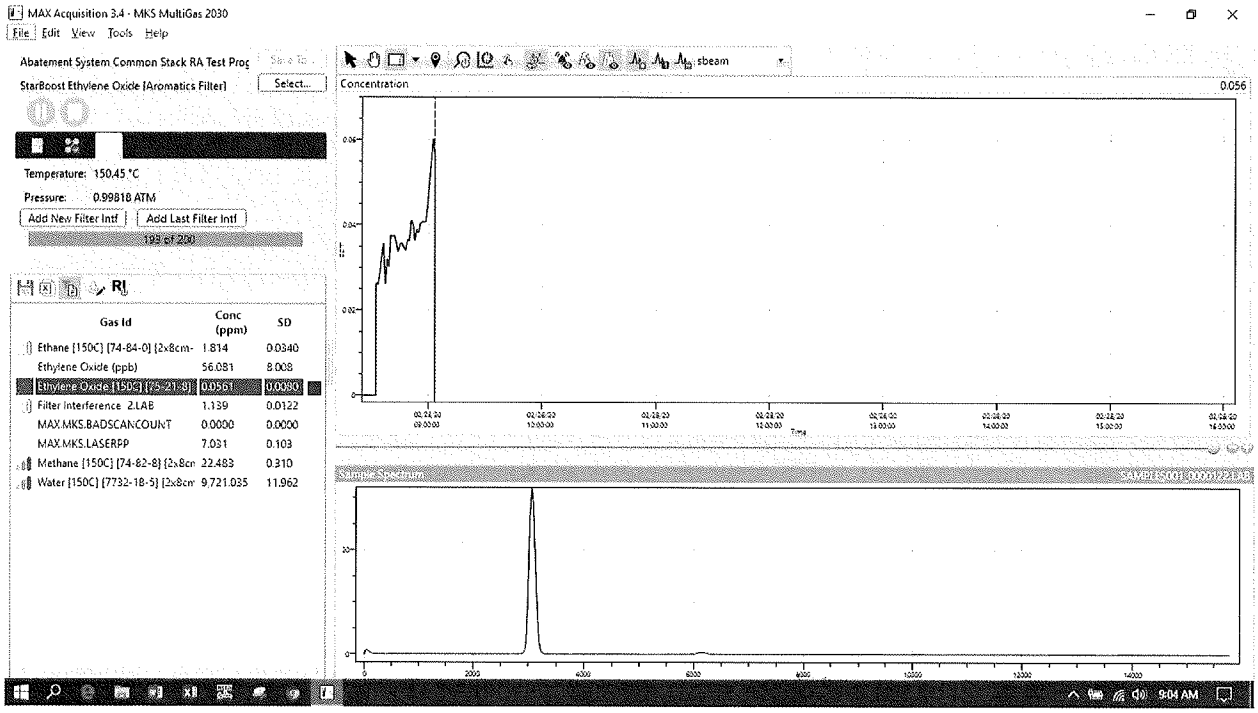
MAX Acquisition 3.4 - MKS MultiGas 2030
File Edit View Tools Help
Abatement System Common Stack RA Test Proc
StarBoost Ethylene Oxide (Aromatics Filter)
Select...
Temperature: 150.45 °C
Pressure: 0.99818 ATM
Add New Filter Intf
Add Last Filter Intf
193 of 200
Gas Id
Conc (ppm)
SD
Ethane [150C] [74-84-0] [2x8cm-
1.814
0.0340
Ethylene Oxide (ppb)
56.081
8.008
Ethylene Oxide [150C] [75-21-8]
0.0561
0.0080
Filter Interference 2.LAB
1.139
0.0122
MAX.MKS.BADSCANCOUNT
0.0000
0.0000
MAX.MKS.LASERPP
7.031
0.103
Methane [150C] [74-82-8] [2x8cm
22.483
0.310
Water [150C] [7732-18-5] [2x8cm
9,721.035
11.962
sbeam
Concentration
0.056
Time
Sample Spectrum
9:04 AM

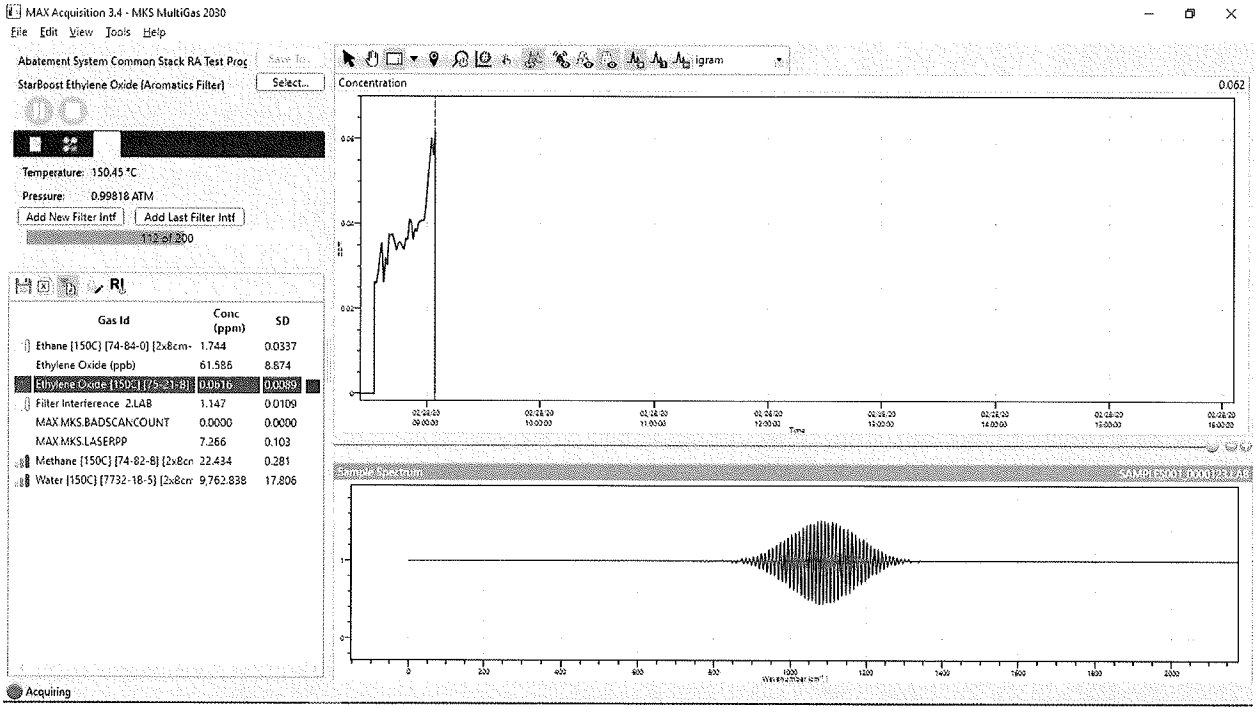
MAX Acquisition 3.4 - MKS MultiGas 2030
File Edit View Tools Help
Abatement System Common Stack RA Test Proc
StarBoost Ethylene Oxide (Aromatics Filter)
Select...
Temperature: 150.45 °C
Pressure: 0.99818 ATM
Add New Filter Intf
Add Last Filter Intf
112 of 200
Gas Id
Conc (ppm)
SD
Ethane [150C] [74-84-0] [2x8cm-
1.744
0.0337
Ethylene Oxide (ppb)
61.586
8.874
Ethylene Oxide [150C] [75-21-8]
0.0616
0.0089
Filter Interference 2.LAB
1.147
0.0109
MAX.MKS.BADSCANCOUNT
0.0000
0.0000
MAX.MKS.LASERPP
7.266
0.103
Methane [150C] [74-82-8] [2x8cm
22.434
0.281
Water [150C] [7732-18-5] [2x8cm
9,762.838
17.806
igram
Concentration
0.062
Time
Sample Spectrum
Acquiring

MONTROSE
AIR QUALITY SERVICES

Dataset Name:	RA Run #1
Project Name:	Medline Waukegan ETO Abatement System Common Stack
Project Date:	3/5/2020
Sample Description:	Initial P.S. RA Certification Test Program-Common Stack
Sample Temperature (C):	N/A
Testing Professional:	William C. James
Analysis Date:	3/5/2020
Instrument Method:	USEPA Method 320 Starboost/MKS 2030
Quant Method:	StarBoost Ethylene Oxide [Aromatics Filter] (Modified)
Results Averaging:	Manual
Dataset Comments:	

Gas	Span
Ethane [150C] [74-84-0] [2x8cm-1] [Aromatics Filter]	NA
Ethylene Oxide (ppb)	NA
Ethylene Oxide [150C] [75-21-8] [2x8cm-1] [Aromatics Filter]	NA
Filter Interference.LAB	NA
Methane [150C] [74-82-8] [2x8cm-1] [Aromatics Filter] [SN110281261]	NA
Water [150C] [7732-18-5] [2x8cm-1] [Aromatics Filter] [SN110281261]	NA
MAX.MKS.BADSCANCOUNT	NA
MAX.MKS.LASERPP	NA

MONTROSE
AIR QUALITY SERVICES

Spectrum	Date	Time	Temp	Pressure	Ethane [150C] [74-84-0] [2x8cm-1] [Aromatics Filter]	Ethylene Oxide [ppb]	Ethylene Oxide [150C] [75-21-8] [2x8cm-1]	Filter Interference.LAB	Methane [150C] [74-82-8] [2x8cm-1] [Aromatics	Water [150C] [7732 18-5] [2x8cm-1] [Aromatics Filter]	MAX.MKS.BADSCA NCOUNT	MAX.MKS.LASERPP
			(C)	(ATM)	Con (ppm)	Con (ppm)	Con (ppm)	Con (ppm)	Con (ppm)	Con (ppm)	Con (ppm)	Con (ppm)
ZERO DIRECT_0000001.LAB	3/5/2020	07:46:26	150.2	0.995	0.013	-9.867	-0.010	0.987	0.025	624.847	0.000	6.992
ZERO DIRECT_0000002.LAB	3/5/2020	07:47:25	150.1	0.995	0.016	-1.853	-0.002	1.006	0.004	306.382	0.000	7.109
ZERO DIRECT_0000003.LAB	3/5/2020	07:48:24	150.1	0.994	0.039	4.253	0.004	0.973	-0.007	139.665	0.000	6.953
ZERO DIRECT_0000004.LAB	3/5/2020	07:49:23	150.1	0.995	0.011	5.584	0.006	0.967	-0.006	64.079	0.000	6.875
ZERO DIRECT_0000005.LAB	3/5/2020	07:50:22	150.3	0.995	0.045	7.409	0.007	0.994	0.001	29.816	0.000	7.344
ZERO DIRECT_0000006.LAB	3/5/2020	07:51:20	150.3	0.995	0.023	2.619	0.003	1.002	-0.007	7.335	0.000	6.992
ZERO DIRECT_0000007.LAB	3/5/2020	07:52:19	150.2	0.995	-0.028	0.106	0.000	1.004	-0.008	7.824	0.000	7.070
ZERO DIRECT_0000008.LAB	3/5/2020	07:53:18	150.1	0.995	0.021	4.327	0.004	1.006	-0.007	-0.753	0.000	7.227
ZERO DIRECT_0000009.LAB	3/5/2020	07:54:17	150.2	0.995	0.010	6.924	0.007	0.994	0.004	2.110	0.000	6.875
ZERO DIRECT_0000010.LAB	3/5/2020	07:55:16	150.1	0.995	0.000	0.000	0.000	1.000	0.000	0.000	0.000	7.070
ZERO DIRECT_0000011.LAB	3/5/2020	07:56:14	150.2	0.995	0.016	-3.727	-0.004	0.983	-0.002	1.402	0.000	7.109
ZERO DIRECT_0000012.LAB	3/5/2020	07:57:13	150.2	0.995	-0.003	0.489	0.000	0.991	-0.004	-0.205	0.000	6.992
ZERO DIRECT_0000013.LAB	3/5/2020	07:58:12	150.3	0.995	0.014	3.453	0.003	1.024	-0.003	8.804	0.000	6.914
CTS DIRECT_0000014.LAB	3/5/2020	07:58:58	150.1	0.999	2.492	350.281	0.350	1.119	102.467	-187.627	0.000	7.188
CTS DIRECT_0000015.LAB	3/5/2020	07:59:12	150.1	0.999	0.617	355.445	0.355	1.171	104.311	-219.108	0.000	6.914
CTS DIRECT_0000016.LAB	3/5/2020	07:59:27	150.1	0.999	0.464	352.883	0.353	1.161	103.879	-220.298	0.000	6.992
CTS DIRECT_0000017.LAB	3/5/2020	07:59:42	150.1	0.999	0.566	358.046	0.358	1.201	103.830	-212.147	0.000	6.953
CTS DIRECT_0000018.LAB	3/5/2020	07:59:56	150.1	0.999	0.524	358.997	0.359	1.196	103.798	-222.580	0.000	6.875
CAL DIRECT_0000019.LAB	3/5/2020	08:00:11	150.0	0.999	3.180	368.830	0.369	1.175	100.933	-192.364	0.000	6.992
CAL DIRECT_0000020.LAB	3/5/2020	08:00:26	150.0	0.999	528.333	2343.652	2.344	1.012	1.629	90.564	0.000	6.953
CAL DIRECT_0000021.LAB	3/5/2020	08:00:40	150.1	0.999	544.277	2372.894	2.373	1.214	-0.538	87.471	0.000	7.266
CAL DIRECT_0000022.LAB	3/5/2020	08:00:55	150.1	0.999	544.559	2371.905	2.372	1.162	-0.561	86.995	0.000	6.875
CAL DIRECT_0000023.LAB	3/5/2020	08:01:10	150.1	0.998	121.528	779.453	0.779	2.209	0.349	83.606	0.000	7.227
CAL DIRECT_0000024.LAB	3/5/2020	08:01:25	150.1	0.998	54.088	241.053	0.241	0.910	0.027	50.544	0.000	7.227
CAL DIRECT_0000025.LAB	3/5/2020	08:01:39	150.1	0.999	54.150	243.796	0.244	0.924	0.038	48.644	0.000	7.227
CAL DIRECT_0000026.LAB	3/5/2020	08:01:54	150.2	0.995	55.386	249.327	0.249	0.945	0.078	43.135	0.000	7.266
CAL DIRECT_0000027.LAB	3/5/2020	08:02:09	150.1	0.995	53.693	230.972	0.231	0.934	0.033	44.105	0.000	7.109
CAL DIRECT_0000028.LAB	3/5/2020	08:02:23	150.1	0.995	53.327	240.249	0.240	0.859	0.036	31.479	0.000	7.227
CAL DIRECT_0000029.LAB	3/5/2020	08:02:38	150.1	0.995	53.142	236.889	0.237	0.936	0.010	43.520	0.000	6.992
CAL DIRECT_0000030.LAB	3/5/2020	08:02:53	150.2	0.995	53.175	234.244	0.234	0.937	0.028	42.308	0.000	7.031
CAL DIRECT_0000031.LAB	3/5/2020	08:03:07	150.2	0.995	171.021	1067.141	1.067	3.291	0.173	147.264	0.000	7.070
CAL DIRECT_0000032.LAB	3/5/2020	08:03:22	150.1	0.995	536.328	2350.374	2.350	1.169	-0.587	67.452	0.000	6.914
CAL DIRECT_0000033.LAB	3/5/2020	08:03:37	150.3	0.995	537.359	2359.514	2.360	1.135	-0.569	95.503	0.000	7.148
CAL DIRECT_0000034.LAB	3/5/2020	08:03:52	150.1	0.995	536.675	2361.695	2.362	1.122	-0.572	90.994	0.000	6.836
ZERO SYSTEM_0000035.LAB	3/5/2020	08:04:53	150.1	0.995	43.408	445.710	0.446	2.554	3.717	1830.719	0.000	7.188
ZERO SYSTEM_0000036.LAB	3/5/2020	08:05:52	150.1	0.993	0.107	-1.554	-0.002	0.990	0.028	23.910	0.000	6.992
ZERO SYSTEM_0000037.LAB	3/5/2020	08:06:51	150.1	0.994	0.097	6.795	0.007	0.969	0.004	-14.448	0.000	7.188
ZERO SYSTEM_0000038.LAB	3/5/2020	08:07:49	150.2	0.994	0.048	4.802	0.005	1.007	0.003	-23.356	0.000	7.148
CTS SYSTEM_0000039.LAB	3/5/2020	08:08:13	150.3	0.995	0.214	8.671	0.009	1.043	3.048	953.203	0.000	6.914
CTS SYSTEM_0000040.LAB	3/5/2020	08:08:28	150.3	0.994	7.393	248.018	0.248	1.138	57.240	2503.967	0.000	7.188
CTS SYSTEM_0000041.LAB	3/5/2020	08:08:43	150.2	0.993	0.612	342.690	0.343	1.127	102.232	-105.321	0.000	7.188
CTS SYSTEM_0000042.LAB	3/5/2020	08:08:57	150.1	0.994	0.604	335.575	0.336	1.077	102.232	-143.423	0.000	7.070
CTS SYSTEM_0000043.LAB	3/5/2020	08:09:12	150.1	0.994	0.540	328.554	0.329	1.095	102.366	-159.873	0.000	7.148
NATIVE_0000044.LAB	3/5/2020	08:09:27	150.1	0.995	0.491	352.551	0.353	1.129	102.222	-173.791	0.000	6.953
NATIVE_0000045.LAB	3/5/2020	08:09:42	150.3	0.993	0.997	113.308	0.113	1.308	25.506	7328.528	0.000	7.227
NATIVE_0000046.LAB	3/5/2020	08:09:56	150.3	0.994	1.204	1058.543	1.059	0.868	17.171	10393.733	0.000	7.070
NATIVE_0000047.LAB	3/5/2020	08:10:11	150.4	0.995	1.306	2246.729	2.247	0.947	16.802	10755.314	0.000	7.070
NATIVE_0000048.LAB	3/5/2020	08:10:26	150.2	0.995	1.168	2257.451	2.257	0.937	16.984	10944.451	0.000	7.070
SPIKE_0000049.LAB	3/5/2020	08:10:40	150.2	0.994	1.201	55.198	0.055	0.913	17.308	11138.092	0.000	6.836
SPIKE_0000050.LAB	3/5/2020	08:10:55	150.2	0.994	1.352	65.245	0.065	0.938	17.690	11262.212	0.000	7.266
SPIKE_0000051.LAB	3/5/2020	08:11:10	150.2	0.994	1.258	57.344	0.057	0.890	18.355	11186.580	0.000	6.875
SPIKE_0000052.LAB	3/5/2020	08:11:25	150.4	0.993	1.323	73.321	0.073	1.447	24.820	10313.300	0.000	7.109
SPIKE_0000053.LAB	3/5/2020	08:11:39	150.2	0.993	20.853	136.717	0.137	1.340	21.029	10421.147	0.000	7.109
SPIKE_0000054.LAB	3/5/2020	08:11:54	150.1	0.993	51.580	223.796	0.224	0.916	15.733	10584.704	0.000	7.070
SPIKE_0000055.LAB	3/5/2020	08:12:08	150.2	0.994	52.251	228.480	0.228	0.919	15.846	10636.411	0.000	7.109
SPIKE_0000056.LAB	3/5/2020	08:12:23	150.2	0.995	52.141	229.177	0.229	0.921	15.914	10687.754	0.000	7.070
SPIKE_0000057.LAB	3/5/2020	08:12:38	150.3	0.993	52.222	249.107	0.249	0.935	15.796	10740.163	0.000	7.188
SPIKE_0000058.LAB	3/5/2020	08:12:53	150.3	0.994	52.049	228.898	0.229	0.928	15.861	10761.795	0.000	7.031
SPIKE_0000059.LAB	3/5/2020	08:13:07	150.1	0.993	52.279	243.848	0.244	0.935	15.922	10784.134	0.000	6.875
SPIKE_0000060.LAB	3/5/2020	08:13:22	150.1	0.995	52.132	238.084	0.238	0.944	15.757	10789.910	0.000	7.031
SPIKE_0000061.LAB	3/5/2020	08:13:37	150.3	0.994	51.119	237.352	0.237	0.904	15.661	10836.446	0.000	6.914
NATIVE_0000062.LAB	3/5/2020	08:13:51	150.2	0.993	51.298	226.311	0.226	0.942	15.486	10862.680	0.000	7.109
NATIVE_0000063.LAB	3/5/2020	08:14:06	150.1	0.995	44.427	218.975	0.219	0.874	15.502	10963.672	0.000	7.031
NATIVE_0000064.LAB	3/5/2020	08:14:21	150.3	0.993	2.032	53.801	0.054	0.957	16.916	11860.143	0.000	7.070
NATIVE_0000065.LAB	3/5/2020	08:14:36	150.2	0.993	1.402	36.145	0.036	0.897	17.284	11885.487	0.000	7.227
NATIVE_0000066.LAB	3/5/2020	08:14:50	150.2	0.994	1.293	42.215	0.042	0.965	16.690	11903.234	0.000	7.031

MONTROSE AIR QUALITY SERVICES

Spectrum	Date	Time	Temp (C)	Pressure (ATM)	Ethane [150C] [74-84-0] [2x8cm-1] [Aromatics Filter] Con (ppm)	Ethylene Oxide (ppb) Con (ppm)	Ethylene Oxide [150C] [75-21-8] [2x8cm-1] Con (ppm)	Filter Interference.LAB Con (ppm)	Methane [150C] [74-82-8] [2x8cm-1] [Aromatics Con (ppm)	Water [150C] [7732-18-5] [2x8cm-1] [Aromatics Filter] Con (ppm)	MAX.MKS.BADSCANCOUNT Con (ppm)	MAX.MKS.LASERPP Con (ppm)
NATIVE_0000067.LAB	3/5/2020	08:15:05	150.3	0.995	1.285	40.909	0.041	0.948	16.876	11920.237	0.000	7.031
SPIKE_0000068.LAB	3/5/2020	08:15:20	150.4	0.994	1.392	49.061	0.049	0.987	17.236	11941.020	0.000	6.953
SPIKE_0000069.LAB	3/5/2020	08:15:34	150.1	0.994	57.545	270.575	0.271	1.680	14.759	10547.564	0.000	7.148
SPIKE_0000070.LAB	3/5/2020	08:15:49	150.3	0.993	51.436	226.163	0.226	0.893	15.846	11005.103	0.000	7.031
SPIKE_0000071.LAB	3/5/2020	08:16:04	150.1	0.993	50.853	247.333	0.247	0.982	16.104	11028.131	0.000	7.031
SPIKE_0000072.LAB	3/5/2020	08:16:18	150.1	0.994	51.314	233.604	0.234	0.959	15.969	11028.711	0.000	7.305
NATIVE_0000073.LAB	3/5/2020	08:16:33	150.1	0.993	48.894	233.106	0.233	0.919	16.002	11063.957	0.000	6.992
NATIVE_0000074.LAB	3/5/2020	08:16:48	150.2	0.994	3.061	64.894	0.065	0.951	17.258	11968.264	0.000	7.148
NATIVE_0000075.LAB	3/5/2020	08:17:03	150.1	0.993	1.487	51.771	0.052	0.978	17.150	12025.249	0.000	7.031
NATIVE_0000076.LAB	3/5/2020	08:17:17	150.3	0.994	1.371	58.003	0.058	0.949	17.419	12017.244	0.000	7.109
NATIVE_0000077.LAB	3/5/2020	08:17:32	150.1	0.994	1.403	44.320	0.044	0.907	17.375	12016.054	0.000	7.031
SPIKE_0000078.LAB	3/5/2020	08:17:47	150.1	0.994	35.173	208.166	0.208	1.622	15.635	11046.543	0.000	6.992
SPIKE_0000079.LAB	3/5/2020	08:18:01	150.2	0.994	57.524	251.847	0.252	0.953	15.702	10884.662	0.000	7.031
SPIKE_0000080.LAB	3/5/2020	08:18:16	150.1	0.993	51.268	234.882	0.235	0.919	15.655	11073.263	0.000	6.992
SPIKE_0000081.LAB	3/5/2020	08:18:31	150.1	0.994	51.479	226.241	0.226	0.944	15.258	11070.307	0.000	7.070
SPIKE_0000082.LAB	3/5/2020	08:18:45	150.3	0.993	51.423	225.184	0.225	0.959	14.931	11102.167	0.000	7.031
SPIKE_0000083.LAB	3/5/2020	08:19:00	150.1	0.993	51.253	218.012	0.218	0.952	14.600	11093.547	0.000	6.992
NATIVE_0000084.LAB	3/5/2020	08:19:15	150.1	0.993	44.722	208.151	0.208	0.882	14.855	11225.233	0.000	7.188
NATIVE_0000085.LAB	3/5/2020	08:19:30	150.1	0.994	1.991	56.758	0.057	1.013	16.460	12091.098	0.000	6.914
NATIVE_0000086.LAB	3/5/2020	08:19:44	150.2	0.994	1.412	39.213	0.039	0.975	16.915	12114.877	0.000	7.266
NATIVE_0000087.LAB	3/5/2020	08:19:59	150.4	0.993	1.346	49.233	0.049	0.905	17.301	12126.775	0.000	7.109
SAMPLE_0000088.LAB	3/5/2020	08:21:13	150.4	0.993	1.353	48.950	0.049	0.954	17.249	12147.779	0.000	7.266
SAMPLE_0000089.LAB	3/5/2020	08:22:12	150.1	0.993	1.300	43.321	0.043	0.992	17.062	12146.946	0.000	6.953
SAMPLE_0000090.LAB	3/5/2020	08:23:11	150.2	0.995	1.288	43.243	0.043	0.936	16.674	12121.484	0.000	7.266
SAMPLE_0000091.LAB	3/5/2020	08:24:09	150.2	0.993	1.265	44.792	0.045	0.972	16.695	12163.368	0.000	7.305
SAMPLE_0000092.LAB	3/5/2020	08:25:08	150.1	0.995	1.279	50.758	0.051	0.943	17.122	12162.744	0.000	7.148
SAMPLE_0000093.LAB	3/5/2020	08:26:07	150.1	0.993	1.295	52.461	0.052	0.972	16.817	12202.636	0.000	7.188
SAMPLE_0000094.LAB	3/5/2020	08:27:06	150.2	0.993	1.279	66.599	0.067	0.959	16.843	12188.041	0.000	7.188
SAMPLE_0000095.LAB	3/5/2020	08:28:05	150.3	0.994	1.294	84.811	0.085	0.965	16.922	12173.397	0.000	6.992
SAMPLE_0000096.LAB	3/5/2020	08:29:03	150.1	0.993	1.303	108.378	0.108	0.957	16.876	12192.130	0.000	7.148
SAMPLE_0000097.LAB	3/5/2020	08:30:02	150.2	0.993	1.321	123.701	0.124	0.934	17.381	12207.787	0.000	7.188
SAMPLE_0000098.LAB	3/5/2020	08:31:01	150.2	0.993	1.302	128.287	0.128	0.972	17.292	12223.802	0.000	6.797
SAMPLE_0000099.LAB	3/5/2020	08:32:00	150.2	0.993	1.307	133.012	0.133	0.954	17.399	12234.927	0.000	7.148
SAMPLE_0000100.LAB	3/5/2020	08:32:59	150.2	0.993	1.340	134.670	0.135	0.945	17.385	12216.082	0.000	7.070
SAMPLE_0000101.LAB	3/5/2020	08:33:57	150.1	0.993	1.262	146.097	0.146	0.936	17.167	12201.856	0.000	6.914
SAMPLE_0000102.LAB	3/5/2020	08:34:56	150.1	0.993	1.315	151.138	0.151	0.962	17.340	12208.988	0.000	7.109
SAMPLE_0000103.LAB	3/5/2020	08:35:55	150.2	0.993	1.281	158.239	0.158	0.957	17.048	12229.969	0.000	7.227
SAMPLE_0000104.LAB	3/5/2020	08:36:54	150.1	0.993	7.832	91.695	0.092	1.215	4.239	3159.450	0.000	7.227
SAMPLE_0000105.LAB	3/5/2020	08:37:53	150.4	0.993	0.215	5.685	0.006	0.946	0.023	12.494	0.000	6.914
SAMPLE_0000106.LAB	3/5/2020	08:38:51	150.2	0.993	0.118	4.439	0.004	0.961	0.020	-10.633	0.000	7.305
SAMPLE_0000107.LAB	3/5/2020	08:39:50	150.1	0.993	0.128	2.437	0.002	0.962	0.006	-19.351	0.000	6.953
SAMPLE_0000108.LAB	3/5/2020	08:40:49	150.1	0.993	0.088	7.432	0.007	0.958	0.011	-19.688	0.000	7.227
SAMPLE_0000109.LAB	3/5/2020	08:41:48	150.2	0.994	0.427	29.869	0.030	1.032	2.666	1314.175	0.000	7.305
SAMPLE_0000110.LAB	3/5/2020	08:42:47	150.2	0.993	0.105	4.455	0.004	0.963	0.009	-3.627	0.000	7.031
SAMPLE_0000111.LAB	3/5/2020	08:43:45	150.2	0.993	0.127	3.639	0.004	0.956	0.016	-24.943	0.000	7.188
SAMPLE_0000112.LAB	3/5/2020	08:44:44	150.1	0.993	0.710	106.152	0.106	1.193	8.673	4724.025	0.000	7.070
SAMPLE_0000113.LAB	3/5/2020	08:45:43	150.1	0.994	1.188	185.696	0.186	0.902	16.654	11055.278	0.000	7.031
SAMPLE_0000114.LAB	3/5/2020	08:46:42	150.3	0.993	1.207	203.047	0.203	0.917	16.956	11508.284	0.000	7.148
SAMPLE_0000115.LAB	3/5/2020	08:47:41	150.2	0.994	1.264	197.907	0.198	0.921	17.152	11709.314	0.000	7.266
SAMPLE_0000116.LAB	3/5/2020	08:48:39	150.3	0.993	1.295	212.693	0.213	0.921	17.495	11872.699	0.000	7.070
SAMPLE_0000117.LAB	3/5/2020	08:49:38	150.1	0.993	1.234	207.686	0.208	0.947	16.871	11963.328	0.000	7.305
SAMPLE_0000118.LAB	3/5/2020	08:50:37	150.2	0.993	1.212	199.507	0.200	0.933	16.706	12039.187	0.000	7.188
SAMPLE_0000119.LAB	3/5/2020	08:51:36	150.2	0.993	1.267	202.471	0.202	0.912	17.036	12084.334	0.000	7.148
SAMPLE_0000120.LAB	3/5/2020	08:52:35	150.3	0.993	1.181	204.119	0.204	0.951	16.991	12118.493	0.000	7.227
SAMPLE_0000121.LAB	3/5/2020	08:53:33	150.2	0.993	1.260	211.190	0.211	0.939	16.797	12160.679	0.000	7.266
SAMPLE_0000122.LAB	3/5/2020	08:54:32	150.1	0.993	1.238	204.496	0.204	0.923	16.697	12185.384	0.000	6.992
SAMPLE_0000123.LAB	3/5/2020	08:55:31	150.1	0.993	1.283	200.364	0.200	0.907	17.012	12186.077	0.000	7.148
SAMPLE_0000124.LAB	3/5/2020	08:56:30	150.1	0.993	1.271	192.298	0.192	0.925	17.071	12187.777	0.000	6.797
SAMPLE_0000125.LAB	3/5/2020	08:57:29	150.2	0.993	1.205	177.743	0.178	0.937	16.699	12213.165	0.000	6.875
SAMPLE_0000126.LAB	3/5/2020	08:58:27	150.2	0.994	1.279	179.625	0.180	0.924	17.119	12226.829	0.000	7.188
SAMPLE_0000127.LAB	3/5/2020	08:59:26	150.1	0.993	1.253	170.235	0.170	0.917	17.149	12223.140	0.000	6.875
SAMPLE_0000128.LAB	3/5/2020	09:00:25	150.1	0.993	1.241	164.342	0.164	0.947	16.885	12219.742	0.000	6.797
SAMPLE_0000129.LAB	3/5/2020	09:01:24	150.1	0.993	1.288	163.548	0.164	0.929	17.044	12220.132	0.000	7.188
SAMPLE_0000130.LAB	3/5/2020	09:02:23	150.3	0.993	1.268	161.340	0.161	0.928	16.836	12260.272	0.000	6.875
SAMPLE_0000131.LAB	3/5/2020	09:03:21	150.1	0.993	1.266	152.026	0.152	0.960	16.898	12271.443	0.000	7.188
SAMPLE_0000132.LAB	3/5/2020	09:04:20	150.2	0.994	1.230	143.654	0.144	0.939	16.439	12257.772	0.000	7.344

MONTROSE
AIR QUALITY SERVICES

Spectrum	Date	Time	Temp	Pressure	Ethane [150C] [74-84-0] [2x8cm-1] [Aromatics Filter]	Ethylene Oxide (ppb)	Ethylene Oxide [150C] [75-21-8] [2x8cm-1]	Filter Interference.LAB	Methane [150C] [74-82-8] [2x8cm-1] [Aromatics	Water [150C] [7732 18-5] [2x8cm-1] [Aromatics Filter]	MAX.MKS.BADSCANCOUNT	MAX.MKS.LASERPP
			(C)	(ATM)	Con (ppm)	Con (ppm)	Con (ppm)	Con (ppm)	Con (ppm)	Con (ppm)	Con (ppm)	Con (ppm)
SAMPLE_0000133.LAB	3/5/2020	09:05:19	150.2	0.993	1.245	145.870	0.146	0.916	16.939	12253.588	0.000	7.266
SAMPLE_0000134.LAB	3/5/2020	09:06:18	150.1	0.993	1.227	132.247	0.132	0.952	16.589	12284.927	0.000	7.148
SAMPLE_0000135.LAB	3/5/2020	09:07:17	150.1	0.993	1.211	127.010	0.127	0.940	16.913	12318.839	0.000	7.188
SAMPLE_0000136.LAB	3/5/2020	09:08:15	150.2	0.993	1.269	117.628	0.118	0.930	16.632	12346.600	0.000	7.148
SAMPLE_0000137.LAB	3/5/2020	09:09:14	150.1	0.993	1.222	116.936	0.117	0.955	16.400	12338.554	0.000	7.148
SAMPLE_0000138.LAB	3/5/2020	09:10:13	150.1	0.993	1.231	111.852	0.112	0.943	16.710	12345.191	0.000	7.188
SAMPLE_0000139.LAB	3/5/2020	09:11:12	150.2	0.993	1.221	107.191	0.107	0.914	16.683	12388.804	0.000	6.992
SAMPLE_0000140.LAB	3/5/2020	09:12:11	150.1	0.994	1.206	107.809	0.108	0.932	16.678	12391.077	0.000	6.992
SAMPLE_0000141.LAB	3/5/2020	09:13:09	150.2	0.993	1.234	99.887	0.100	0.936	16.491	12404.889	0.000	7.070
SAMPLE_0000142.LAB	3/5/2020	09:14:08	150.1	0.993	1.239	94.641	0.095	0.923	16.495	12418.794	0.000	7.070
SAMPLE_0000143.LAB	3/5/2020	09:15:07	150.4	0.993	1.242	97.789	0.098	0.890	16.635	12406.285	0.000	7.031
SAMPLE_0000144.LAB	3/5/2020	09:16:06	150.1	0.993	1.280	89.491	0.089	0.928	16.368	12395.926	0.000	7.188
SAMPLE_0000145.LAB	3/5/2020	09:17:05	150.1	0.993	1.171	76.530	0.077	0.953	15.935	12404.600	0.000	7.148
SAMPLE_0000146.LAB	3/5/2020	09:18:03	150.2	0.993	1.197	81.941	0.082	0.963	16.428	12434.658	0.000	7.109
SAMPLE_0000147.LAB	3/5/2020	09:19:02	150.2	0.993	1.240	85.390	0.085	0.898	16.400	12447.198	0.000	7.344
SAMPLE_0000148.LAB	3/5/2020	09:20:01	150.1	0.993	1.240	83.570	0.084	0.911	16.927	12442.844	0.000	7.031
SAMPLE_0000149.LAB	3/5/2020	09:21:00	150.1	0.993	1.220	65.835	0.066	0.897	16.465	12420.159	0.000	7.070
SAMPLE_0000150.LAB	3/5/2020	09:21:59	150.2	0.993	1.243	64.217	0.064	0.932	16.530	12415.233	0.000	7.109
SAMPLE_0000151.LAB	3/5/2020	09:22:58	150.2	0.993	1.196	59.583	0.060	0.901	16.344	12391.348	0.000	7.188
SAMPLE_0000152.LAB	3/5/2020	09:23:56	150.2	0.993	1.179	51.512	0.0515	0.907	15.934	12392.060	0.000	7.227
SAMPLE_0000153.LAB	3/5/2020	09:24:55	150.1	0.993	1.196	55.538	0.0555	0.927	16.190	12390.022	0.000	7.031
SAMPLE_0000154.LAB	3/5/2020	09:25:54	150.1	0.993	1.186	48.490	0.0485	0.902	16.011	12382.341	0.000	6.992
SAMPLE_0000155.LAB	3/5/2020	09:26:53	150.1	0.993	1.200	52.126	0.0521	0.918	16.063	12391.336	0.000	7.188
SAMPLE_0000156.LAB	3/5/2020	09:27:52	150.1	0.993	1.207	39.982	0.0400	0.907	15.950	12405.379	0.000	7.266
SAMPLE_0000157.LAB	3/5/2020	09:28:50	150.1	0.993	1.169	43.152	0.0432	0.913	15.857	12402.893	0.000	7.070
SAMPLE_0000158.LAB	3/5/2020	09:29:49	150.2	0.993	1.191	39.526	0.0395	0.927	16.062	12414.644	0.000	7.188
SAMPLE_0000159.LAB	3/5/2020	09:30:48	150.2	0.993	1.206	42.290	0.0423	0.902	16.218	12396.170	0.000	7.070
SAMPLE_0000160.LAB	3/5/2020	09:31:47	150.1	0.993	1.173	52.880	0.0529	0.914	16.173	12370.398	0.000	7.148
SAMPLE_0000161.LAB	3/5/2020	09:32:46	150.2	0.993	1.226	44.711	0.0447	0.899	16.158	12365.955	0.000	7.188
SAMPLE_0000162.LAB	3/5/2020	09:33:44	150.2	0.993	1.173	39.956	0.0400	0.886	15.888	12346.908	0.000	7.070
SAMPLE_0000163.LAB	3/5/2020	09:34:43	150.1	0.993	1.185	38.314	0.0383	0.891	16.003	12329.881	0.000	7.031
SAMPLE_0000164.LAB	3/5/2020	09:35:42	150.2	0.993	1.244	38.932	0.0389	0.899	16.152	12345.313	0.000	7.266
SAMPLE_0000165.LAB	3/5/2020	09:36:41	150.2	0.993	1.178	34.648	0.0346	0.883	16.043	12325.951	0.000	7.148
SAMPLE_0000166.LAB	3/5/2020	09:37:40	150.1	0.993	1.178	39.451	0.0395	0.909	15.894	12310.649	0.000	7.070
SAMPLE_0000167.LAB	3/5/2020	09:38:38	150.1	0.993	1.132	32.272	0.0323	0.895	15.585	12302.088	0.000	7.305
SAMPLE_0000168.LAB	3/5/2020	09:39:37	150.3	0.992	1.165	32.303	0.0323	0.884	16.085	12322.782	0.000	6.914
SAMPLE_0000169.LAB	3/5/2020	09:40:36	150.3	0.992	1.134	28.557	0.0286	0.900	15.961	12309.132	0.000	7.109
SAMPLE_0000170.LAB	3/5/2020	09:41:35	150.2	0.992	1.132	30.151	0.0302	0.895	15.933	12302.298	0.000	7.227
SAMPLE_0000171.LAB	3/5/2020	09:42:34	150.1	0.992	1.137	27.093	0.0271	0.893	15.710	12319.716	0.000	6.992
SAMPLE_0000172.LAB	3/5/2020	09:43:32	150.3	0.993	1.174	24.268	0.0243	0.922	15.625	12303.678	0.000	7.148
SAMPLE_0000173.LAB	3/5/2020	09:44:31	150.1	0.993	1.159	19.450	0.0194	0.902	15.720	12302.247	0.000	7.188
SAMPLE_0000174.LAB	3/5/2020	09:45:30	150.1	0.993	1.139	27.280	0.0273	0.879	15.771	12294.750	0.000	6.992
SAMPLE_0000175.LAB	3/5/2020	09:46:29	150.1	0.992	1.166	21.105	0.0211	0.869	15.886	12301.605	0.000	7.148
SAMPLE_0000176.LAB	3/5/2020	09:47:28	150.3	0.992	1.136	23.998	0.0240	0.858	15.621	12312.542	0.000	7.305
SAMPLE_0000177.LAB	3/5/2020	09:48:26	150.2	0.992	1.185	20.979	0.0210	0.893	16.049	12321.521	0.000	7.109
SAMPLE_0000178.LAB	3/5/2020	09:49:25	150.1	0.992	1.195	22.162	0.0222	0.869	16.434	12332.355	0.000	7.305
SAMPLE_0000179.LAB	3/5/2020	09:50:24	150.2	0.992	1.196	29.399	0.0294	0.858	16.365	12311.367	0.000	7.227
SAMPLE_0000180.LAB	3/5/2020	09:51:23	150.1	0.992	1.155	12.560	0.0126	0.885	15.646	12315.512	0.000	7.031
SAMPLE_0000181.LAB	3/5/2020	09:52:22	150.2	0.992	1.169	26.895	0.0269	0.878	16.485	12324.518	0.000	7.070
							0.0347			12341.5337		
SAMPLE_0000182.LAB	3/5/2020	09:53:20	150.1	0.992	1.185	39.645	0.040	0.876	16.175	12332.522	0.000	7.148

MONTROSE
AIR QUALITY SERVICES

Test Run Calibration and System Performance Check

Run ID: RA Run #1
Date: 3/5/2020

Cylinder Standards Information:	Value	Cylinder ID
CTS Methane	100.3	Airgas CC-420194
Ethylene Oxide/513.9 Ethane	2.286	Airgas CC-717111
Ethylene Oxide dilution	228.6	Low level 10:1 dilution

Spectrum Comments	Analyte	Spectrum	Date	Time	Ethylene Oxide (ppb)	Ethylene Oxide (ppm)	Methane (ppm)	Pass +/- 5.0% Diff?
Interferometer Direct Zero N2	zero Ethylene/Ethane/CH4/H2O	ZERO DIRECT_0000012.LAB	3/5/2020	07:57:13	0.4892	0.0005	-0.0037	OK
Interferometer Direct CTS inject	512 ppm ethane/100.3 ppm CH4	CTS DIRECT_0000018.LAB	3/5/2020	07:59:56			103.7984	YES
Interferometer Direct Calibration Check Std inject	2.286 ppm ethylene oxide	CAL DIRECT_0000020.LAB	3/5/2020	08:00:26	2343.6518	2.3437		YES
Interferometer Direct Calibration Low Check Std. inject	228.6 ppb ethylene oxide	CAL DIRECT_0000027.LAB	3/5/2020	08:02:09	230.9721	0.2310		YES
Sample System Zero N2	zero Ethylene/Ethane/CH4/H2O	ZERO SYSTEM_0000036.LAB	3/5/2020	08:05:52	-1.5541	-0.0016	0.0284	OK
Sample System CTS inject	512 ppm ethane/100 ppm CH4	CTS SYSTEM_0000042.LAB	3/5/2020	08:08:57			102.2319	YES
Sample System Calibration Check Std inject	2.286 ppm ethylene oxide	NATIVE_0000048.LAB	3/5/2020	08:10:26	2257.4514	2.2575		YES
Sample SystemCalibration Low Check Std. inject	228.6 ppb ethylene oxide	SPIKE_0000055.LAB	3/5/2020	08:12:08	228.4805	0.2285		YES

MONTROSE AIR QUALITY SERVICES

Test Run Calibration and System Performance Check

Run ID: RA Run #1
Date: 3/5/2020

Cylinder Standards Information:	Value	Cylinder ID
CTS Methane	100.3	Airgas CC-420194
Ethylene Oxide/513.9 Ethane	2.286	Airgas CC-717111
Ethylene Oxide dilution	228.6	Low level 100:1 dilution

Spectrum Comments	Analyte	Spectrum	Date	Time	Ethylene Oxide (ppb)	Ethylene Oxide (ppm)	Methane (ppm)	Pass +/- 5.0% Diff?
Interferometer Direct Zero N2	zero Ethylene/Ethane/CH4/H2O	ZERO DIRECT_0000012.LAB	3/5/2020	07:57:13	0.4892	0.0005	-0.0037	OK
Interferometer Direct CTS inject	512 ppm ethane/100.3 ppm CH4	CTS DIRECT_0000018.LAB	3/5/2020	07:59:56			103.7984	YES
Interferometer Direct Calibration Check Std inject	2.286 ppm ethylene oxide	CAL DIRECT_0000020.LAB	3/5/2020	08:00:26	2343.6518	2.3437		YES
Interferometer Direct Calibration Low Check Std. inject	228.6 ppb ethylene oxide	CAL DIRECT_0000027.LAB	3/5/2020	08:02:09	230.9721	0.2310		YES
Pre Test System Check:								
Sample System Zero N2	zero Ethylene/Ethane/CH4/H2O	ZERO SYSTEM_0000036.LAB	3/5/2020	08:05:52	-1.5541	-0.0016	0.0284	OK
Sample System CTS inject	512 ppm ethane/100 ppm CH4	CTS SYSTEM_0000042.LAB	3/5/2020	08:08:57			102.2319	YES
Sample System Calibration Check Std inject	2.286 ppm ethylene oxide	NATIVE_0000048.LAB	3/5/2020	08:10:26	2257.4514	2.2575		YES
Sample SystemCalibration Low Check Std. inject	228.6 ppb ethylene oxide	SPIKE_0000055.LAB	3/5/2020	08:12:08	228.4805	0.2285		YES
Post-Test System Check:								
Sample System Zero N2	zero Ethylene/Ethane/CH4/H2O	ZERO SYSTEM_0000189.LAB	3/5/2020	09:59:28	2.1637	0.0022	0.0174	OK
Sample System CTS inject	512 ppm ethane/100 ppm CH4	CTS SYSTEM_0000194.LAB	3/5/2020	10:01:03			101.9433	YES
Sample System Calibration Check Std inject	2.286 ppm ethylene oxide							N/A
Sample SystemCalibration Low Check Std. inject	228.6 ppb ethylene oxide							N/A

MONTROSE
AIR QUALITY SERVICES

Dataset Name:	RA Run #2
Project Name:	Medline Waukegan ETO Abatement System Common Stack
Project Date:	3/5/2020
Sample Description:	Initial P.S. RA Certification Test Program-Common Stack
Sample Temperature (C):	N/A
Testing Professional:	William C. James
Analysis Date:	3/5/2020
Instrument Method:	USEPA Method 320 Starboost/MKS 2030
Quant Method:	StarBoost Ethylene Oxide [Aromatics Filter] (Modified)
Results Averaging:	Manual
Dataset Comments:	

Gas	Span
Ethane [150C] [74-84-0] [2x8cm-1] [Aromatics Filter]	NA
Ethylene Oxide (ppb)	NA
Ethylene Oxide [150C] [75-21-8] [2x8cm-1] [Aromatics Filter]	NA
Filter Interference.LAB	NA
Methane [150C] [74-82-8] [2x8cm-1] [Aromatics Filter] [SN110281261]	NA
Water [150C] [7732-18-5] [2x8cm-1] [Aromatics Filter] [SN110281261]	NA
MAX.MKS.BADSCANCOUNT	NA
MAX.MKS.LASERPP	NA

MONTROSE
AIR QUALITY SERVICES

Spectrum	Date	Time	Temp (C)	Pressure (ATM)	Ethane [150C] [74-84-0] [2x8cm-1] [Aromatics Filter] Con (ppm)	Ethylene Oxide (ppb) Con (ppb)	Ethylene Oxide [150C] [75-21-8] [2x8cm-1] Con (ppm)	Filter Interference.LAB Con (ppm)	Methane [150C] [74-82-8] [2x8cm-1] [Aromatics Filter] Con (ppm)	Water [150C] [7732-18-5] [2x8cm-1] [Aromatics Filter] Con (ppm)
ZERO SYSTEM_0000185.LAB	3/5/2020	09:56:06	150.2	0.992	0.224	-6.260	-0.006	0.896	0.068	126.230
ZERO SYSTEM_0000186.LAB	3/5/2020	09:56:21	150.1	0.992	0.125	-3.828	-0.004	0.849	0.039	77.950
ZERO SYSTEM_0000187.LAB	3/5/2020	09:57:30	150.1	0.992	0.123	-2.304	-0.002	0.847	0.035	23.566
ZERO SYSTEM_0000188.LAB	3/5/2020	09:58:29	150.1	0.992	0.155	5.902	0.006	0.852	0.017	2.447
ZERO SYSTEM_0000189.LAB	3/5/2020	09:59:28	150.3	0.992	0.127	2.164	0.002	0.889	0.017	-5.569
CTS SYSTEM_0000190.LAB	3/5/2020	10:00:05	150.3	0.992	0.113	-6.671	-0.007	0.867	1.554	377.184
CTS SYSTEM_0000191.LAB	3/5/2020	10:00:19	150.1	0.991	0.515	208.440	0.208	0.942	55.671	2211.783
CTS SYSTEM_0000192.LAB	3/5/2020	10:00:34	150.1	0.992	0.409	339.882	0.340	0.985	101.983	-90.836
CTS SYSTEM_0000193.LAB	3/5/2020	10:00:49	150.2	0.992	0.447	338.745	0.339	0.998	102.058	-139.497
CTS SYSTEM_0000194.LAB	3/5/2020	10:01:03	150.1	0.992	0.504	336.224	0.336	0.918	101.943	-147.375
NATIVE_0000195.LAB	3/5/2020	10:01:18	150.2	0.992	0.522	333.269	0.333	0.973	101.930	-151.526
SAMPLE_0000196.LAB	3/5/2020	10:02:18	150.2	0.992	0.196	107.772	0.108	0.558	17.887	3019.294
SAMPLE_0000197.LAB	3/5/2020	10:03:17	150.2	0.992	0.127	-4.623	-0.005	0.860	0.085	9.378
SAMPLE_0000198.LAB	3/5/2020	10:04:16	150.3	0.992	0.108	-1.054	-0.001	0.859	0.056	-11.342
SAMPLE_0000199.LAB	3/5/2020	10:05:15	150.2	0.992	0.311	-0.680	-0.001	0.914	2.850	1550.441
SAMPLE_0000200.LAB	3/5/2020	10:06:13	150.1	0.991	0.113	4.122	0.004	0.857	0.040	-8.067
SAMPLE_0000201.LAB	3/5/2020	10:07:12	150.1	0.992	0.550	15.720	0.016	1.021	6.324	3640.588
SAMPLE_0000202.LAB	3/5/2020	10:08:11	150.1	0.992	1.135	24.981	0.025	0.829	15.637	11091.719
SAMPLE_0000203.LAB	3/5/2020	10:09:10	150.2	0.992	1.149	18.406	0.018	0.824	16.017	11663.423
SAMPLE_0000204.LAB	3/5/2020	10:10:09	150.2	0.992	1.228	22.358	0.022	0.835	15.904	11918.835
SAMPLE_0000205.LAB	3/5/2020	10:11:07	150.1	0.993	1.128	17.563	0.018	0.851	15.739	12038.738
SAMPLE_0000206.LAB	3/5/2020	10:12:06	150.1	0.991	1.145	24.841	0.025	0.862	16.015	12156.591
SAMPLE_0000207.LAB	3/5/2020	10:13:05	150.1	0.992	1.213	26.885	0.027	0.879	16.273	12229.938
SAMPLE_0000208.LAB	3/5/2020	10:14:04	150.1	0.992	1.179	19.673	0.020	0.853	16.133	12279.898
SAMPLE_0000209.LAB	3/5/2020	10:15:03	150.2	0.992	1.141	25.489	0.025	0.852	16.343	12317.297
SAMPLE_0000210.LAB	3/5/2020	10:16:01	150.2	0.991	1.252	23.360	0.023	0.863	16.545	12357.153
SAMPLE_0000211.LAB	3/5/2020	10:17:00	150.1	0.992	1.209	28.095	0.028	0.820	16.587	12366.659
SAMPLE_0000212.LAB	3/5/2020	10:17:59	150.2	0.992	1.224	20.233	0.020	0.843	16.658	12374.546
SAMPLE_0000213.LAB	3/5/2020	10:18:58	150.2	0.992	1.153	18.649	0.0186	0.853	15.696	12378.401
SAMPLE_0000214.LAB	3/5/2020	10:19:57	150.2	0.992	1.146	22.471	0.0225	0.867	15.692	12369.480
SAMPLE_0000215.LAB	3/5/2020	10:20:56	150.3	0.992	1.182	21.955	0.0220	0.846	15.874	12393.306
SAMPLE_0000216.LAB	3/5/2020	10:21:54	150.1	0.992	1.222	27.400	0.0274	0.839	16.253	12395.456
SAMPLE_0000217.LAB	3/5/2020	10:22:53	150.1	0.991	1.268	27.203	0.0272	0.844	16.391	12413.993
SAMPLE_0000218.LAB	3/5/2020	10:23:52	150.1	0.990	1.206	20.514	0.0205	0.855	16.084	12423.001
SAMPLE_0000219.LAB	3/5/2020	10:24:51	150.1	0.991	1.199	28.474	0.0285	0.848	16.243	12427.737
SAMPLE_0000220.LAB	3/5/2020	10:25:50	150.2	0.991	1.168	21.455	0.0215	0.854	15.638	12431.062
SAMPLE_0000221.LAB	3/5/2020	10:26:48	150.2	0.990	1.201	25.488	0.0255	0.878	15.783	12454.429
SAMPLE_0000222.LAB	3/5/2020	10:27:47	150.1	0.992	1.201	13.293	0.0133	0.839	15.683	12439.571
SAMPLE_0000223.LAB	3/5/2020	10:28:46	150.2	0.992	1.162	17.695	0.0177	0.861	15.504	12424.856
SAMPLE_0000224.LAB	3/5/2020	10:29:45	150.1	0.991	1.163	21.363	0.0214	0.859	15.494	12440.527
SAMPLE_0000225.LAB	3/5/2020	10:30:44	150.1	0.990	1.165	19.436	0.0194	0.865	15.519	12454.613
SAMPLE_0000226.LAB	3/5/2020	10:31:42	150.3	0.990	1.169	17.840	0.0178	0.818	15.179	12457.853
SAMPLE_0000227.LAB	3/5/2020	10:32:41	150.2	0.991	1.116	17.346	0.0173	0.857	15.373	12467.703
SAMPLE_0000228.LAB	3/5/2020	10:33:40	150.1	0.991	1.135	17.017	0.0170	0.841	15.308	12457.988
SAMPLE_0000229.LAB	3/5/2020	10:34:39	150.2	0.990	1.127	19.081	0.0191	0.852	15.044	12478.415
SAMPLE_0000230.LAB	3/5/2020	10:35:38	150.3	0.991	1.123	18.770	0.0188	0.862	15.088	12484.668
SAMPLE_0000231.LAB	3/5/2020	10:36:36	150.2	0.991	1.121	12.778	0.0128	0.869	15.051	12476.895
SAMPLE_0000232.LAB	3/5/2020	10:37:35	150.2	0.991	1.147	20.781	0.0208	0.864	15.122	12490.609
SAMPLE_0000233.LAB	3/5/2020	10:38:34	150.1	0.992	1.158	16.564	0.0166	0.866	15.613	12483.017

MONTROSE
AIR QUALITY SERVICES

Spectrum	Date	Time	Temp	Pressure	Ethane [150C] [74-84-0] [2x8cm-1] [Aromatics Filter]	Ethylene Oxide (ppb)	Ethylene Oxide [150C] [75-21-8] [2x8cm-1]	Filter Interference.LAB	Methane [150C] [74-82-8] [2x8cm-1] [Aromatics Filter]	Water [150C] [7732-18-5] [2x8cm-1] [Aromatics Filter]
			(C)	(ATM)	Con (ppm)	Con (ppb)	Con (ppm)	Con (ppm)	Con (ppm)	Con (ppm)
SAMPLE_0000234.LAB	3/5/2020	10:39:33	150.0	0.990	1.201	21.098	0.0211	0.855	15.901	12508.198
SAMPLE_0000235.LAB	3/5/2020	10:40:32	150.2	0.991	1.112	13.883	0.0139	0.844	15.457	12514.363
SAMPLE_0000236.LAB	3/5/2020	10:41:30	150.1	0.991	1.185	15.192	0.0152	0.868	15.587	12511.346
SAMPLE_0000237.LAB	3/5/2020	10:42:29	150.1	0.990	1.197	26.526	0.0265	0.841	15.992	12526.838
SAMPLE_0000238.LAB	3/5/2020	10:43:28	150.1	0.990	1.147	25.309	0.0253	0.846	15.740	12553.766
SAMPLE_0000239.LAB	3/5/2020	10:44:27	150.2	0.991	1.182	19.166	0.0192	0.865	15.275	12557.423
SAMPLE_0000240.LAB	3/5/2020	10:45:26	150.1	0.990	1.174	23.913	0.0239	0.863	16.046	12567.332
SAMPLE_0000241.LAB	3/5/2020	10:46:24	150.2	0.990	1.145	15.261	0.0153	0.821	15.662	12568.992
SAMPLE_0000242.LAB	3/5/2020	10:47:23	150.2	0.991	1.231	20.928	0.0209	0.845	16.234	12571.678
							0.02023			12470.7838

MONTROSE
AIR QUALITY SERVICES

Test Run Calibration and System Performance Check

Run ID: RA Run #2
Date: 3/5/2020

Cylinder Standards Information:	Value	Cylinder ID
CTS Methane	100.3	Airgas CC-420194
Ethylene Oxide/513.9 Ethane	2.286	Airgas CC-717111
Ethylene Oxide dilution	228.6	Low level 100:1 dilution

Spectrum Comments	Analyte	Spectrum	Date	Time	Ethylene Oxide (ppb)	Ethylene Oxide (ppm)	Methane (ppm)	Pass +/- 5.0% Diff?
Interferometer Direct Zero N2	zero Ethylene/Ethane/CH4/H2O	ZERO DIRECT_0000012.LAB	3/5/2020	07:57:13	0.4892	0.0005	-0.0037	OK
Interferometer Direct CTS inject	512 ppm ethane/100.3 ppm CH4	CTS DIRECT_0000018.LAB	3/5/2020	07:59:56			103.7984	YES
Interferometer Direct Calibration Check Std inject	2.286 ppm ethylene oxide	CAL DIRECT_0000020.LAB	3/5/2020	08:00:26	2343.6518	2.3437		YES
Interferometer Direct Calibration Low Check Std. inject	228.6 ppb ethylene oxide	CAL DIRECT_0000027.LAB	3/5/2020	08:02:09	230.9721	0.2310		YES
Pre Test System Check:								
Sample System Zero N2	zero Ethylene/Ethane/CH4/H2O	ZERO SYSTEM_0000189.LAB	3/5/2020	09:59:28	2.1637	0.0022	0.0174	OK
Sample System CTS inject	512 ppm ethane/100 ppm CH4	CTS SYSTEM_0000194.LAB	3/5/2020	10:01:03			101.9433	YES
Sample System Calibration Check Std inject	2.286 ppm ethylene oxide							N/A
Sample SystemCalibration Low Check Std. inject	228.6 ppb ethylene oxide							N/A

MONTROSE
AIR QUALITY SERVICES

Dataset Name:	RA Run #3
Project Name:	Medline Waukegan ETO Abatement System Common Stack
Project Date:	3/5/2020
Sample Description:	Initial P.S. RA Certification Test Program-Common Stack
Sample Temperature (C):	N/A
Testing Professional:	William C. James
Analysis Date:	3/5/2020
Instrument Method:	USEPA Method 320 Starboost/MKS 2030
Quant Method:	StarBoost Ethylene Oxide [Aromatics Filter] (Modified)
Results Averaging:	Manual
Dataset Comments:	

Gas	Span
Ethane [150C] [74-84-0] [2x8cm-1] [Aromatics Filter]	NA
Ethylene Oxide (ppb)	NA
Ethylene Oxide [150C] [75-21-8] [2x8cm-1] [Aromatics Filter]	NA
Filter Interference.LAB	NA
Methane [150C] [74-82-8] [2x8cm-1] [Aromatics Filter] [SN110281261]	NA
Water [150C] [7732-18-5] [2x8cm-1] [Aromatics Filter] [SN110281261]	NA
MAX.MKS.BADSCANCOUNT	NA
MAX.MKS.LASERPP	NA

MONTROSE
AIR QUALITY SERVICES

Spectrum	Date	Time	Temp (C)	Pressure (ATM)	Ethane [150C] [74-84-0] [2x8cm-1] Con (ppm)	Ethylene Oxide (ppb) Con (ppm)	Ethylene Oxide [150C] [75-21-8] Con (ppm)	Methane [150C] [74-82-8] [2x8cm-1] Con (ppm)	Water [150C] [7732-18-5] [2x8cm-1] Con (ppm)
SAMPLE_0000247.LAB	3/5/2020	10:52:17	150.0	0.990	1.230	21.768	0.022	16.339	12569.275
SAMPLE_0000248.LAB	3/5/2020	10:53:16	150.1	0.990	1.256	22.907	0.023	16.167	12569.712
SAMPLE_0000249.LAB	3/5/2020	10:54:15	150.2	0.991	1.187	15.688	0.016	15.980	12558.709
ZERO SYSTEM_0000250.LAB	3/5/2020	10:55:37	150.1	0.991	0.660	24.857	0.025	5.136	4101.490
ZERO SYSTEM_0000251.LAB	3/5/2020	10:56:36	150.1	0.991	0.128	1.099	0.001	0.040	37.074
CTS SYSTEM_0000252.LAB	3/5/2020	10:57:08	150.1	0.991	0.214	-3.558	-0.004	1.792	597.762
CTS SYSTEM_0000253.LAB	3/5/2020	10:57:22	150.2	0.990	0.221	159.230	0.159	45.666	3870.464
CTS SYSTEM_0000254.LAB	3/5/2020	10:57:37	150.2	0.991	0.435	334.754	0.335	101.660	-48.631
CTS SYSTEM_0000255.LAB	3/5/2020	10:57:52	150.2	0.991	0.538	329.366	0.329	101.948	-113.129
CTS SYSTEM_0000256.LAB	3/5/2020	10:58:07	150.1	0.990	0.430	352.433	0.352	101.886	-124.447
CTS SYSTEM_0000257.LAB	3/5/2020	10:58:21	150.2	0.990	0.513	329.746	0.330	101.913	-125.526
SPIKE_0000258.LAB	3/5/2020	10:58:36	150.2	0.991	0.538	346.120	0.346	101.893	-137.556
SPIKE_0000259.LAB	3/5/2020	10:58:51	150.3	0.992	0.627	103.539	0.104	31.245	6729.154
SPIKE_0000260.LAB	3/5/2020	10:59:05	150.2	0.991	0.423	83.987	0.084	16.538	3842.203
SAMPLE_0000261.LAB	3/5/2020	11:00:07	150.1	0.991	0.190	-0.443	0.000	0.632	289.200
SAMPLE_0000262.LAB	3/5/2020	11:01:05	150.3	0.990	0.125	0.223	0.000	0.055	2.863
SAMPLE_0000263.LAB	3/5/2020	11:02:04	150.1	0.991	0.142	1.415	0.001	0.044	-6.633
SAMPLE_0000264.LAB	3/5/2020	11:03:03	150.1	0.991	0.131	7.556	0.008	0.040	-16.948
SAMPLE_0000265.LAB	3/5/2020	11:04:02	150.3	0.990	0.215	1.299	0.001	0.402	-14.031
SAMPLE_0000266.LAB	3/5/2020	11:05:01	150.1	0.990	0.151	8.519	0.009	0.048	-11.201
SAMPLE_0000267.LAB	3/5/2020	11:11:36	150.1	0.991	1.248	1.316	0.001	16.248	11921.420
SAMPLE_0000268.LAB	3/5/2020	11:12:35	150.2	0.991	1.243	5.369	0.005	16.486	12051.589
SAMPLE_0000269.LAB	3/5/2020	11:13:33	150.2	0.990	1.259	12.143	0.012	17.098	12164.015
SAMPLE_0000270.LAB	3/5/2020	11:14:32	150.1	0.990	1.281	11.084	0.011	16.727	12249.020
SAMPLE_0000271.LAB	3/5/2020	11:15:31	150.1	0.990	1.274	13.118	0.013	16.843	12304.079
SAMPLE_0000272.LAB	3/5/2020	11:16:30	150.2	0.991	1.257	8.834	0.009	16.489	12330.299
SAMPLE_0000273.LAB	3/5/2020	11:17:29	150.1	0.990	1.266	12.828	0.013	16.577	12366.238
SAMPLE_0000274.LAB	3/5/2020	11:18:27	150.2	0.990	1.237	11.510	0.012	16.337	12425.263
SAMPLE_0000275.LAB	3/5/2020	11:19:26	150.2	0.990	1.242	10.326	0.010	16.228	12437.232
SAMPLE_0000276.LAB	3/5/2020	11:20:25	150.1	0.990	1.223	9.427	0.009	16.249	12438.671
SAMPLE_0000277.LAB	3/5/2020	11:21:24	150.1	0.990	1.246	10.234	0.010	15.984	12452.200
SAMPLE_0000278.LAB	3/5/2020	11:22:23	150.1	0.990	1.267	15.459	0.015	16.294	12483.014
SAMPLE_0000279.LAB	3/5/2020	11:23:22	150.1	0.990	1.230	13.698	0.014	15.902	12504.247
SAMPLE_0000280.LAB	3/5/2020	11:24:20	150.1	0.990	1.208	9.706	0.010	15.924	12505.922
SAMPLE_0000281.LAB	3/5/2020	11:25:19	150.1	0.991	1.227	3.126	0.003	15.703	12504.045
SAMPLE_0000282.LAB	3/5/2020	11:26:18	150.1	0.990	1.181	10.148	0.010	15.809	12516.386
SAMPLE_0000283.LAB	3/5/2020	11:27:17	150.1	0.991	1.217	8.747	0.009	16.048	12523.258
SAMPLE_0000284.LAB	3/5/2020	11:28:16	150.1	0.990	1.256	16.132	0.016	15.908	12534.586
SAMPLE_0000285.LAB	3/5/2020	11:29:14	150.2	0.991	1.187	13.630	0.014	15.833	12525.232
SAMPLE_0000286.LAB	3/5/2020	11:30:13	150.1	0.990	1.215	7.788	0.0078	15.815	12538.688
SAMPLE_0000287.LAB	3/5/2020	11:31:12	150.1	0.990	1.272	9.688	0.0097	16.154	12539.487
SAMPLE_0000288.LAB	3/5/2020	11:32:11	150.1	0.990	1.228	4.504	0.0045	15.960	12536.282
SAMPLE_0000289.LAB	3/5/2020	11:33:09	150.2	0.990	1.275	17.367	0.0174	16.466	12530.050
SAMPLE_0000290.LAB	3/5/2020	11:34:08	150.2	0.991	1.203	4.901	0.0049	15.810	12513.239
SAMPLE_0000291.LAB	3/5/2020	11:35:07	150.2	0.990	1.245	8.917	0.0089	15.768	12525.322
SAMPLE_0000292.LAB	3/5/2020	11:36:06	150.1	0.990	1.240	11.661	0.0117	15.889	12537.678
SAMPLE_0000293.LAB	3/5/2020	11:37:05	150.2	0.990	1.257	14.250	0.0142	16.177	12534.027
SAMPLE_0000294.LAB	3/5/2020	11:38:04	150.3	0.990	1.222	13.599	0.0136	16.209	12538.668
SAMPLE_0000295.LAB	3/5/2020	11:39:02	150.1	0.990	1.257	11.348	0.0113	16.045	12530.179
SAMPLE_0000296.LAB	3/5/2020	11:40:01	150.0	0.991	1.199	20.485	0.0205	16.166	12530.732
SAMPLE_0000297.LAB	3/5/2020	11:41:00	150.1	0.991	1.243	11.429	0.0114	15.917	12543.251
SAMPLE_0000298.LAB	3/5/2020	11:41:59	150.1	0.990	1.250	20.853	0.0209	16.274	12543.708
SAMPLE_0000299.LAB	3/5/2020	11:42:58	150.1	0.991	1.273	12.317	0.0123	16.567	12539.212
SAMPLE_0000300.LAB	3/5/2020	11:43:56	150.1	0.991	1.281	21.221	0.0212	16.406	12542.563
SAMPLE_0000301.LAB	3/5/2020	11:44:55	150.1	0.990	1.285	17.977	0.0180	16.297	12566.143
SAMPLE_0000302.LAB	3/5/2020	11:45:54	150.1	0.990	1.279	11.977	0.0120	16.411	12561.748
SAMPLE_0000303.LAB	3/5/2020	11:46:53	150.3	0.990	1.202	21.088	0.0211	16.265	12566.132

MONTROSE
AIR QUALITY SERVICES

Spectrum	Date	Time	Temp	Pressure	Ethane [150C] [74-84-0] [2x8cm-1]	Ethylene Oxide (ppb)	Ethylene Oxide [150C] [75-21-8]	Methane [150C] [74-82-8] [2x8cm-1]	Water [150C] [7732-18-5] [2x8cm-1]
			(C)	(ATM)	Con (ppm)	Con (ppm)	Con (ppm)	Con (ppm)	Con (ppm)
SAMPLE_0000304.LAB	3/5/2020	11:47:52	150.2	0.990	1.253	15.783	0.0158	16.319	12555.756
SAMPLE_0000305.LAB	3/5/2020	11:48:50	150.3	0.990	1.202	12.973	0.0130	15.916	12551.947
SAMPLE_0000306.LAB	3/5/2020	11:49:49	150.2	0.990	1.219	9.883	0.0099	15.878	12563.799
SAMPLE_0000307.LAB	3/5/2020	11:50:48	150.2	0.990	1.256	18.366	0.0184	16.135	12572.621
SAMPLE_0000308.LAB	3/5/2020	11:51:47	150.1	0.990	1.190	16.186	0.0162	16.246	12574.964
SAMPLE_0000309.LAB	3/5/2020	11:52:46	150.1	0.990	1.243	22.736	0.0227	16.090	12592.486
SAMPLE_0000310.LAB	3/5/2020	11:53:45	150.2	0.990	1.294	25.765	0.0258	16.555	12599.465
SAMPLE_0000311.LAB	3/5/2020	11:54:43	150.1	0.991	1.235	17.405	0.0174	16.382	12589.181
SAMPLE_0000312.LAB	3/5/2020	11:55:42	150.1	0.991	1.239	18.975	0.0190	16.324	12577.892
SAMPLE_0000313.LAB	3/5/2020	11:56:41	150.1	0.990	1.301	21.286	0.0213	17.015	12594.583
SAMPLE_0000314.LAB	3/5/2020	11:57:40	150.1	0.990	1.277	22.859	0.0229	16.596	12603.599
SAMPLE_0000315.LAB	3/5/2020	11:58:38	150.1	0.991	1.276	21.348	0.0213	16.716	12582.558
SAMPLE_0000316.LAB	3/5/2020	11:59:37	150.2	0.990	1.232	19.859	0.0199	16.334	12577.747
							0.01564		12556.57120
ZERO DIRECT_0000001.LAB	3/5/2020	12:05:04	150.1	0.991	0.011	-24.605	-0.025	0.040	0.000
ZERO DIRECT_0000002.LAB	3/5/2020	12:06:02	150.1	0.991	0.027	-19.570	-0.020	0.028	0.000
ZERO DIRECT_0000003.LAB	3/5/2020	12:07:01	150.1	0.991	0.039	-19.009	-0.019	0.024	0.000
ZERO DIRECT_0000004.LAB	3/5/2020	12:08:00	150.2	0.990	0.020	-20.338	-0.020	0.025	0.000
ZERO DIRECT_0000005.LAB	3/5/2020	12:08:59	150.2	0.991	0.025	-19.173	-0.019	0.025	0.000
ZERO DIRECT_0000006.LAB	3/5/2020	12:10:21	150.1	0.990	0.031	-15.792	-0.016	0.026	0.000
ZERO DIRECT_0000007.LAB	3/5/2020	12:11:20	150.1	0.991	0.016	-11.720	-0.012	0.030	0.000
ZERO DIRECT_0000008.LAB	3/5/2020	12:12:19	150.1	0.991	0.039	-14.895	-0.015	0.032	0.000
ZERO SYSTEM_0000009.LAB	3/5/2020	12:13:28	150.1	0.991	0.032	-14.845	-0.015	0.025	0.000
ZERO SYSTEM_0000010.LAB	3/5/2020	12:14:27	150.2	0.990	0.069	-1.280	-0.001	0.033	0.000
CTS SYSTEM_0000011.LAB	3/5/2020	12:14:57	150.2	0.995	-0.464	121.713	0.122	22.707	0.000
CTS SYSTEM_0000012.LAB	3/5/2020	12:15:11	150.1	0.990	0.057	160.286	0.160	44.270	0.000
CTS SYSTEM_0000013.LAB	3/5/2020	12:15:26	150.1	0.990	0.202	354.502	0.355	101.464	0.000
CTS SYSTEM_0000014.LAB	3/5/2020	12:15:41	150.3	0.990	0.314	362.468	0.362	101.839	0.000
CTS SYSTEM_0000015.LAB	3/5/2020	12:15:56	150.1	0.990	0.272	365.597	0.366	101.774	0.000
CTS SYSTEM_0000016.LAB	3/5/2020	12:16:10	150.1	0.991	0.296	350.100	0.350	101.733	0.000

MONTROSE AIR QUALITY SERVICES

Test Run Calibration and System Performance Check

Run ID: RA Run #3
Date: 3/5/2020

Cylinder Standards Information:	Value	Cylinder ID
CTS Methane	100.3	Airgas CC-420194
Ethylene Oxide/513.9 Ethane	2.286	Airgas CC-717111
Ethylene Oxide dilution	228.6	Low level 100:1 dilution

Spectrum Comments	Analyte	Spectrum	Date	Time	Ethylene Oxide (ppb)	Ethylene Oxide (ppm)	Methane (ppm)	Pass +/- 5.0% Diff?
Interferometer Direct Zero N2	zero Ethylene/Ethane/CH4/H2O	ZERO DIRECT_0000012.LAB	3/5/2020	07:57:13	0.4892	0.0005	-0.0037	OK
Interferometer Direct CTS inject	512 ppm ethane/100.3 ppm CH4	CTS DIRECT_0000018.LAB	3/5/2020	07:59:56			103.7984	YES
Interferometer Direct Calibration Check Std inject	2.286 ppm ethylene oxide	CAL DIRECT_0000020.LAB	3/5/2020	08:00:26	2343.6518	2.3437		YES
Interferometer Direct Calibration Low Check Std. inject	228.6 ppb ethylene oxide	CAL DIRECT_0000027.LAB	3/5/2020	08:02:09	230.9721	0.2310		YES
Pre Test System Check:								
Sample System Zero N2	zero Ethylene/Ethane/CH4/H2O	ZERO SYSTEM_0000251.LAB	3/5/2020	10:56:36	15.5658	0.0156	15.7237	OK
Sample System CTS inject	512 ppm ethane/100 ppm CH4	CTS SYSTEM_0000257.LAB	3/5/2020	10:58:21			101.9433	YES
Sample System Calibration Check Std inject	2.286 ppm ethylene oxide							N/A
Sample SystemCalibration Low Check Std. inject	228.6 ppb ethylene oxide							N/A
Post-Test System Check:								
Sample System Zero N2	zero Ethylene/Ethane/CH4/H2O	ZERO SYSTEM_0000010.LAB	3/5/2020	12:14:27	-1.2799	-0.0013	0.0330	OK
Sample System CTS inject	512 ppm ethane/100 ppm CH4	CTS SYSTEM_0000016.LAB	3/5/2020	12:16:10			101.7328	YES
Sample System Calibration Check Std inject	2.286 ppm ethylene oxide							N/A
Sample SystemCalibration Low Check Std. inject	228.6 ppb ethylene oxide							N/A

MONTROSE
AIR QUALITY SERVICES

Dataset Name:	RA Run #4
Project Name:	Medline Waukegan ETO Abatement System Common Stack
Project Date:	3/5/2020
Sample Description:	Initial P.S. RA Certification Test Program-Common Stack
Sample Temperature (C):	N/A
Testing Professional:	William C. James
Analysis Date:	3/5/2020
Instrument Method:	USEPA Method 320 Starboost/MKS 2030
Quant Method:	StarBoost Ethylene Oxide [Aromatics Filter] (Modified)
Results Averaging:	Manual
Dataset Comments:	

Gas	Span
Ethane [150C] [74-84-0] [2x8cm-1] [Aromatics Filter]	NA
Ethylene Oxide (ppb)	NA
Ethylene Oxide [150C] [75-21-8] [2x8cm-1] [Aromatics Filter]	NA
Methane [150C] [74-82-8] [2x8cm-1] [Aromatics Filter] [SN110281261]	NA
Water [150C] [7732-18-5] [2x8cm-1] [Aromatics Filter] [SN110281261]	NA
MAX.MKS.BADSCANCOUNT	NA
MAX.MKS.LASERPP	NA

MONTROSE
AIR QUALITY SERVICES

Spectrum	Date	Time	Temp (C)	Pressure (ATM)	Ethane [150C] [74-84-0] [2x8cm-1] [Aromatics Filter] Con (ppm)	Ethylene Oxide (ppb) Con (ppm)	Ethylene Oxide [150C] [75-21-8] [2x8cm-1] Con (ppm)	Methane [150C] [74-82-8] [2x8cm-1] [Aromatics Filter] Con (ppm)	Water [150C] [7732-18-5] [2x8cm-1] [Aromatics Filter] Con (ppm)
SAMPLE_0000017.LAB	3/5/2020	12:17:18	150.1	0.990	-0.620	128.796	0.129	31.039	1612.398
SAMPLE_0000018.LAB	3/5/2020	12:18:17	150.2	0.990	0.110	-14.233	-0.014	0.097	130.407
SAMPLE_0000019.LAB	3/5/2020	12:19:16	150.3	0.990	0.053	-16.999	-0.017	0.064	97.820
SAMPLE_0000020.LAB	3/5/2020	12:20:14	150.3	0.990	0.051	-16.905	-0.017	0.052	92.066
SAMPLE_0000021.LAB	3/5/2020	12:21:13	150.2	0.990	0.183	-8.372	-0.008	2.700	1274.073
SAMPLE_0000022.LAB	3/5/2020	12:22:12	150.1	0.990	0.040	-15.049	-0.015	0.074	101.449
SAMPLE_0000023.LAB	3/5/2020	12:23:11	150.3	0.990	0.054	-18.803	-0.019	0.198	108.986
SAMPLE_0000024.LAB	3/5/2020	12:24:09	150.2	0.991	0.272	-7.003	-0.007	3.891	2246.778
SAMPLE_0000025.LAB	3/5/2020	12:25:08	150.3	0.991	0.055	-10.687	-0.011	0.057	98.608
SAMPLE_0000026.LAB	3/5/2020	12:26:07	150.2	0.990	0.120	-11.652	-0.012	1.426	641.688
SAMPLE_0000027.LAB	3/5/2020	12:27:06	150.1	0.990	1.188	-5.414	-0.005	17.183	10805.054
SAMPLE_0000028.LAB	3/5/2020	12:28:05	150.1	0.990	1.130	-10.633	-0.011	16.896	11776.945
SAMPLE_0000029.LAB	3/5/2020	12:29:04	150.2	0.990	1.144	-8.387	-0.008	16.733	12112.746
SAMPLE_0000030.LAB	3/5/2020	12:30:02	150.2	0.990	1.175	-8.158	-0.0082	16.898	12283.947
SAMPLE_0000031.LAB	3/5/2020	12:31:01	150.0	0.990	1.167	3.302	0.0033	17.013	12385.246
SAMPLE_0000032.LAB	3/5/2020	12:32:00	150.2	0.990	1.194	1.759	0.0018	17.263	12496.035
SAMPLE_0000033.LAB	3/5/2020	12:32:59	150.1	0.990	1.166	-3.750	-0.0037	16.923	12543.769
SAMPLE_0000034.LAB	3/5/2020	12:33:58	150.1	0.990	1.196	2.871	0.0029	16.551	12559.453
SAMPLE_0000035.LAB	3/5/2020	12:34:56	150.1	0.990	1.241	-2.533	-0.0025	16.849	12590.305
SAMPLE_0000036.LAB	3/5/2020	12:35:55	150.1	0.990	1.305	-9.788	-0.0098	16.913	12638.423
SAMPLE_0000037.LAB	3/5/2020	12:36:54	150.1	0.990	1.171	-0.711	-0.0007	16.580	12654.429
SAMPLE_0000038.LAB	3/5/2020	12:37:53	150.1	0.990	1.225	1.123	0.0011	16.918	12684.873
SAMPLE_0000039.LAB	3/5/2020	12:38:52	150.1	0.990	1.163	-3.362	-0.0034	16.529	12686.260
SAMPLE_0000040.LAB	3/5/2020	12:39:50	150.1	0.990	1.186	-4.231	-0.0042	16.665	12683.990
SAMPLE_0000041.LAB	3/5/2020	12:40:49	150.2	0.990	1.230	-5.776	-0.0058	16.924	12690.046
SAMPLE_0000042.LAB	3/5/2020	12:41:48	150.1	0.990	1.202	-0.773	-0.0008	16.823	12683.902
SAMPLE_0000043.LAB	3/5/2020	12:42:47	150.1	0.990	1.216	-2.862	-0.0029	16.869	12700.644
SAMPLE_0000044.LAB	3/5/2020	12:43:46	150.1	0.990	1.163	1.959	0.0020	16.938	12714.420
SAMPLE_0000045.LAB	3/5/2020	12:44:44	150.2	0.990	1.171	-0.630	-0.0006	16.818	12715.473
SAMPLE_0000046.LAB	3/5/2020	12:45:43	150.1	0.990	1.203	-1.989	-0.0020	16.952	12725.030
SAMPLE_0000047.LAB	3/5/2020	12:46:42	150.3	0.990	1.198	-1.544	-0.0015	16.800	12738.342
SAMPLE_0000048.LAB	3/5/2020	12:47:41	150.1	0.990	1.196	0.865	0.0009	16.936	12733.873
SAMPLE_0000049.LAB	3/5/2020	12:48:40	150.1	0.990	1.230	1.483	0.0015	16.820	12746.181
SAMPLE_0000050.LAB	3/5/2020	12:49:39	150.0	0.990	1.147	-8.654	-0.0087	16.362	12741.153
SAMPLE_0000051.LAB	3/5/2020	12:50:37	150.1	0.990	1.195	0.191	0.0002	16.696	12745.541
SAMPLE_0000052.LAB	3/5/2020	12:51:36	150.1	0.990	1.218	4.902	0.0049	17.024	12757.859
SAMPLE_0000053.LAB	3/5/2020	12:52:35	150.1	0.990	1.214	-1.726	-0.0017	16.720	12768.450
SAMPLE_0000054.LAB	3/5/2020	12:53:34	150.1	0.990	1.189	3.204	0.0032	16.733	12770.546
SAMPLE_0000055.LAB	3/5/2020	12:54:32	150.1	0.990	1.204	2.299	0.0023	16.915	12785.342
SAMPLE_0000056.LAB	3/5/2020	12:55:31	150.1	0.990	1.204	4.462	0.0045	16.665	12789.855
SAMPLE_0000057.LAB	3/5/2020	12:56:30	150.1	0.990	1.215	0.310	0.0003	16.887	12787.754
SAMPLE_0000058.LAB	3/5/2020	12:57:29	150.2	0.990	1.193	-0.721	-0.0007	16.639	12805.493
SAMPLE_0000059.LAB	3/5/2020	12:58:28	150.1	0.990	1.186	-0.867	-0.0009	17.151	12815.212
SAMPLE_0000060.LAB	3/5/2020	12:59:27	150.1	0.990	1.212	5.326	0.0053	17.118	12821.188
SAMPLE_0000061.LAB	3/5/2020	13:00:25	150.1	0.989	1.244	4.912	0.0049	17.243	12840.088
							-0.0006		12690.0975
SAMPLE_0000062.LAB	3/5/2020	13:01:24	150.1	0.990	0.899	24.913	0.025	11.384	8674.974
ZERO SYSTEM_0000063.LAB	3/5/2020	13:03:07	150.1	0.990	0.042	-1.832	-0.001	0.047	126.777
ZERO SYSTEM_0000064.LAB	3/5/2020	13:04:06	150.1	0.990	0.052	-0.634	-0.021	0.041	107.875
ZERO SYSTEM_0000065.LAB	3/5/2020	13:05:05	150.1	0.990	0.054	-0.536	-0.001	0.044	99.431
ZERO SYSTEM_0000066.LAB	3/5/2020	13:06:18	150.1	0.989	-0.719	217.550	0.218	42.745	934.012
CTS SYSTEM_0000067.LAB	3/5/2020	13:06:52	150.1	0.990	0.287	375.240	0.375	101.553	-1.573

CTS SYSTEM_0000068.LAB	3/5/2020	13:07:07	150.1	0.990	0.318	369.691	0.370	101.625	-10.576
CTS SYSTEM_0000069.LAB	3/5/2020	13:07:22	150.2	0.990	0.314	358.061	0.358	101.644	-10.436
CTS SYSTEM_0000070.LAB	3/5/2020	13:07:37	150.2	0.990	0.246	355.392	0.355	101.707	-6.434

MONTROSE AIR QUALITY SERVICES

Test Run Calibration and System Performance Check

Run ID: RA Run #4
Date: 3/5/2020

Cylinder Standards Information:	Value	Cylinder ID
CTS Methane	100.3	Airgas CC-420194
Ethylene Oxide/513.9 Ethane	2.286	Airgas CC-717111
Ethylene Oxide dilution	228.6	Low level 100:1 dilution

Spectrum Comments	Analyte	Spectrum	Date	Time	Ethylene Oxide (ppb)	Ethylene Oxide (ppm)	Methane (ppm)	Pass +/- 5.0% Diff?
Interferometer Direct Zero N2	zero Ethylene/Ethane/CH4/H2O	ZERO DIRECT_0000012.LAB	3/5/2020	07:57:13	0.4892	0.0005	-0.0037	OK
Interferometer Direct CTS inject	512 ppm ethane/100.3 ppm CH4	CTS DIRECT_0000018.LAB	3/5/2020	07:59:56			103.7984	YES
Interferometer Direct Calibration Check Std inject	2.286 ppm ethylene oxide	CAL DIRECT_0000020.LAB	3/5/2020	08:00:26	2343.6518	2.3437		YES
Interferometer Direct Calibration Low Check Std. inject	228.6 ppb ethylene oxide	CAL DIRECT_0000027.LAB	3/5/2020	08:02:09	230.9721	0.2310		YES
Pre Test System Check:								
Sample System Zero N2	zero Ethylene/Ethane/CH4/H2O	ZERO SYSTEM_0000010.LAB	3/5/2020	12:14:27	-1.2799	-0.0013	0.0330	OK
Sample System CTS inject	512 ppm ethane/100 ppm CH4	CTS SYSTEM_0000016.LAB	3/5/2020	12:16:10			101.7328	YES
Sample System Calibration Check Std inject	2.286 ppm ethylene oxide							N/A
Sample SystemCalibration Low Check Std. inject	228.6 ppb ethylene oxide							N/A
Post-Test System Check:								
Sample System Zero N2	zero Ethylene/Ethane/CH4/H2O	ZERO SYSTEM_0000065.LAB	3/5/2020	13:05:05	-0.5361	-0.0006	0.0442	OK
Sample System CTS inject	512 ppm ethane/100 ppm CH4	CTS SYSTEM_0000070.LAB	3/5/2020	13:07:37			101.7067	YES
Sample System Calibration Check Std inject	2.286 ppm ethylene oxide							N/A
Sample SystemCalibration Low Check Std. inject	228.6 ppb ethylene oxide							N/A

MONTROSE
AIR QUALITY SERVICES

Dataset Name:	RA Run #5
Project Name:	Medline Waukegan ETO Abatement System Common Stack
Project Date:	3/5/2020
Sample Description:	Initial P.S. RA Certification Test Program-Common Stack
Sample Temperature (C):	N/A
Testing Professional:	William C. James
Analysis Date:	3/5/2020
Instrument Method:	USEPA Method 320 Starboost/MKS 2030
Quant Method:	StarBoost Ethylene Oxide [Aromatics Filter] (Modified)
Results Averaging:	Manual
Dataset Comments:	

Gas	Span
Ethane [150C] [74-84-0] [2x8cm-1] [Aromatics Filter]	NA
Ethylene Oxide (ppb)	NA
Ethylene Oxide [150C] [75-21-8] [2x8cm-1] [Aromatics Filter]	NA
Methane [150C] [74-82-8] [2x8cm-1] [Aromatics Filter] [SN110281261]	NA
Water [150C] [7732-18-5] [2x8cm-1] [Aromatics Filter] [SN110281261]	NA
MAX.MKS.BADSCANCOUNT	NA
MAX.MKS.LASERPP	NA

MONTROSE AIR QUALITY SERVICES

Spectrum	Date	Time	Temp (C)	Pressure (ATM)	Ethane [150C] [74-84-0] [2x8cm-1] [Aromatics Filter] Con (ppm)	Ethylene Oxide (ppb) Con (ppm)	Ethylene Oxide [150C] [75-21-8] [2x8cm-1] Con (ppm)	Methane [150C] [74-82-8] [2x8cm-1] [Aromatics Filter] Con (ppm)	Water [150C] [7732-18-5] [2x8cm-1] [Aromatics Filter] Con (ppm)
SAMPLE_0000089.LAB	3/5/2020	13:23:45	150.2	0.990	1.186	1.161	0.001	16.773	12864.413
SAMPLE_0000090.LAB	3/5/2020	13:24:44	150.1	0.990	1.193	-10.037	-0.010	16.944	12903.513
SAMPLE_0000091.LAB	3/5/2020	13:25:43	150.2	0.989	1.205	-10.913	-0.011	17.056	12930.355
SAMPLE_0000092.LAB	3/5/2020	13:26:42	150.1	0.990	1.202	-13.470	-0.013	17.374	12938.188
SAMPLE_0000093.LAB	3/5/2020	13:27:41	150.2	0.990	1.184	-10.958	-0.011	16.834	12946.975
SAMPLE_0000094.LAB	3/5/2020	13:28:39	150.2	0.989	1.272	-9.401	-0.009	17.124	12977.690
SAMPLE_0000095.LAB	3/5/2020	13:29:38	150.1	0.989	1.204	-13.628	-0.014	16.904	12979.626
SAMPLE_0000096.LAB	3/5/2020	13:30:37	150.1	0.989	1.213	-15.829	-0.016	16.918	12992.257
SAMPLE_0000097.LAB	3/5/2020	13:31:36	150.2	0.989	1.152	-9.671	-0.010	17.057	13002.719
SAMPLE_0000098.LAB	3/5/2020	13:32:35	150.1	0.990	1.134	-5.530	-0.006	16.955	12996.934
SAMPLE_0000099.LAB	3/5/2020	13:33:33	150.3	0.990	1.142	-17.379	-0.017	16.505	13007.510
SAMPLE_0000100.LAB	3/5/2020	13:34:32	150.1	0.990	1.223	-8.209	-0.008	17.243	13011.814
SAMPLE_0000101.LAB	3/5/2020	13:35:31	150.1	0.990	1.123	-5.799	-0.006	16.509	13031.260
SAMPLE_0000102.LAB	3/5/2020	13:36:30	150.1	0.990	1.174	-8.826	-0.009	16.624	13032.231
SAMPLE_0000103.LAB	3/5/2020	13:37:29	150.1	0.989	1.145	-11.076	-0.011	16.435	13050.731
SAMPLE_0000104.LAB	3/5/2020	13:38:27	150.1	0.989	1.186	-9.306	-0.009	16.725	13076.660
SAMPLE_0000105.LAB	3/5/2020	13:39:26	150.2	0.990	1.182	-16.542	-0.017	16.597	13071.952
SAMPLE_0000106.LAB	3/5/2020	13:40:25	150.2	0.990	1.176	-16.090	-0.016	16.640	13090.430
SAMPLE_0000107.LAB	3/5/2020	13:41:24	150.1	0.989	1.143	-12.512	-0.013	16.653	13096.257
SAMPLE_0000108.LAB	3/5/2020	13:42:23	150.2	0.989	1.158	-11.481	-0.011	16.603	13112.274
SAMPLE_0000109.LAB	3/5/2020	13:43:22	150.1	0.989	1.188	-6.253	-0.006	16.916	13126.308
SAMPLE_0000110.LAB	3/5/2020	13:44:20	150.1	0.990	1.103	-13.626	-0.014	16.650	13127.740
SAMPLE_0000111.LAB	3/5/2020	13:45:19	150.1	0.990	1.193	-6.342	-0.006	16.771	13123.250
SAMPLE_0000112.LAB	3/5/2020	13:46:18	150.1	0.990	1.212	-12.442	-0.012	16.789	13131.930
SAMPLE_0000113.LAB	3/5/2020	13:47:17	150.1	0.989	1.249	-12.223	-0.012	17.276	13153.993
SAMPLE_0000114.LAB	3/5/2020	13:48:15	150.1	0.990	1.201	-10.333	-0.010	16.683	13172.266
SAMPLE_0000115.LAB	3/5/2020	13:49:14	150.1	0.990	1.185	-16.456	-0.016	16.676	13158.040
SAMPLE_0000116.LAB	3/5/2020	13:50:13	150.1	0.989	1.147	-11.682	-0.012	16.589	13184.317
SAMPLE_0000117.LAB	3/5/2020	13:51:12	150.1	0.990	1.179	-10.566	-0.011	16.496	13214.614
SAMPLE_0000118.LAB	3/5/2020	13:52:11	150.2	0.989	1.186	-8.210	-0.008	16.443	13238.479
SAMPLE_0000119.LAB	3/5/2020	13:53:09	150.1	0.990	1.204	-5.590	-0.006	16.951	13234.880
SAMPLE_0000120.LAB	3/5/2020	13:54:08	150.1	0.989	1.144	-1.578	-0.002	16.984	13240.372
							-0.011		13081.735
SAMPLE_0000121.LAB	3/5/2020	13:55:07	150.1	0.990	1.170	-9.485	-0.009	16.922	13257.746
SAMPLE_0000122.LAB	3/5/2020	13:56:06	150.1	0.989	1.155	-2.490	-0.002	16.704	13289.604
ZERO SYSTEM_0000123.LAB	3/5/2020	13:57:13	150.1	0.989	0.058	-26.888	-0.027	0.122	297.622
ZERO SYSTEM_0000124.LAB	3/5/2020	13:58:12	150.2	0.989	0.044	-15.845	-0.016	0.056	129.811
ZERO SYSTEM_0000125.LAB	3/5/2020	13:59:10	150.2	0.989	0.075	-17.532	-0.018	0.050	109.368
ZERO SYSTEM_0000126.LAB	3/5/2020	13:59:59	150.2	0.989	0.029	-8.165	-0.008	0.051	93.093
ZERO SYSTEM_0000127.LAB	3/5/2020	14:00:14	150.2	0.990	0.036	-18.454	-0.018	0.048	99.104
ZERO SYSTEM_0000128.LAB	3/5/2020	14:00:29	150.1	0.989	0.053	-8.337	-0.008	0.041	100.717
CTS SYSTEM_0000129.LAB	3/5/2020	14:00:44	150.1	0.989	0.052	-19.232	-0.019	0.051	87.434
CTS SYSTEM_0000130.LAB	3/5/2020	14:00:58	150.3	0.989	0.147	46.003	0.046	19.817	2822.180
CTS SYSTEM_0000131.LAB	3/5/2020	14:01:13	150.1	0.989	0.362	362.598	0.363	100.552	119.999
CTS SYSTEM_0000132.LAB	3/5/2020	14:01:28	150.1	0.989	0.298	361.299	0.361	101.574	26.122
CTS SYSTEM_0000133.LAB	3/5/2020	14:01:42	150.2	0.989	0.203	363.820	0.364	101.574	-2.420
CTS SYSTEM_0000134.LAB	3/5/2020	14:01:57	150.2	0.989	0.306	364.672	0.365	101.522	2.257
CTS SYSTEM_0000135.LAB	3/5/2020	14:02:12	150.2	0.990	0.274	368.871	0.369	101.537	0.074
CTS SYSTEM_0000136.LAB	3/5/2020	14:02:26	150.1	0.989	0.207	370.010	0.370	101.540	-7.199
CTS SYSTEM_0000137.LAB	3/5/2020	14:02:41	150.1	0.990	0.279	376.250	0.376	101.534	-12.861
CTS SYSTEM_0000138.LAB	3/5/2020	14:02:56	150.2	0.989	0.290	372.655	0.373	101.672	-30.158
CTS SYSTEM_0000139.LAB	3/5/2020	14:03:11	150.1	0.990	0.219	362.214	0.362	101.508	-18.704

MONTROSE AIR QUALITY SERVICES

Test Run Calibration and System Performance Check

Run ID: RA Run #5
Date: 3/5/2020

Cylinder Standards Information:	Value	Cylinder ID
CTS Methane	100.3	Airgas CC-420194
Ethylene Oxide/513.9 Ethane	2.286	Airgas CC-717111
Ethylene Oxide dilution	228.6	Low level 100:1 dilution

Spectrum Comments	Analyte	Spectrum	Date	Time	Ethylene Oxide (ppb)	Ethylene Oxide (ppm)	Methane (ppm)	Pass +/- 5.0% Diff?
Interferometer Direct Zero N2	zero Ethylene/Ethane/CH4/H2O	ZERO DIRECT_0000012.LAB	3/5/2020	07:57:13	0.4892	0.0005	-0.0037	OK
Interferometer Direct CTS inject	512 ppm ethane/100.3 ppm CH4	CTS DIRECT_0000018.LAB	3/5/2020	07:59:56			103.7984	YES
Interferometer Direct Calibration Check Std inject	2.286 ppm ethylene oxide	CAL DIRECT_0000020.LAB	3/5/2020	08:00:26	2343.6518	2.3437		YES
Interferometer Direct Calibration Low Check Std. inject	228.6 ppb ethylene oxide	CAL DIRECT_0000027.LAB	3/5/2020	08:02:09	230.9721	0.2310		YES
Pre Test System Check:								
Sample System Zero N2	zero Ethylene/Ethane/CH4/H2O	ZERO SYSTEM_0000065.LAB	3/5/2020	13:05:05	-0.5361	-0.0006	0.0442	OK
Sample System CTS inject	512 ppm ethane/100 ppm CH4	CTS SYSTEM_0000070.LAB	3/5/2020	13:07:37			101.7067	YES
Sample System Calibration Check Std inject	2.286 ppm ethylene oxide							N/A
Sample SystemCalibration Low Check Std. inject	228.6 ppb ethylene oxide							N/A
Post-Test System Check:								
Sample System Zero N2	zero Ethylene/Ethane/CH4/H2O	ZERO SYSTEM_0000126.LAB	3/5/2020	13:59:59	-8.1650	-0.0082	0.0510	OK
Sample System CTS inject	512 ppm ethane/100 ppm CH4	CTS SYSTEM_0000139.LAB	3/5/2020	14:03:11			101.5083	YES
Sample System Calibration Check Std inject	2.286 ppm ethylene oxide							N/A
Sample SystemCalibration Low Check Std. inject	228.6 ppb ethylene oxide							N/A

MONTROSE
AIR QUALITY SERVICES

Dataset Name:	RA Run #6
Project Name:	Medline Waukegan ETO Abatement System Common Stack
Project Date:	3/5/2020
Sample Description:	Initial P.S. RA Certification Test Program-Common Stack
Sample Temperature (C):	N/A
Testing Professional:	William C. James
Analysis Date:	3/5/2020
Instrument Method:	USEPA Method 320 Starboost/MKS 2030
Quant Method:	StarBoost Ethylene Oxide [Aromatics Filter] (Modified)
Results Averaging:	Manual
Dataset Comments:	

Gas	Span
Ethane [150C] [74-84-0] [2x8cm-1] [Aromatics Filter]	NA
Ethylene Oxide (ppb)	NA
Ethylene Oxide [150C] [75-21-8] [2x8cm-1] [Aromatics Filter]	NA
Filter Interference.LAB	NA
Methane [150C] [74-82-8] [2x8cm-1] [Aromatics Filter] [SN110281261]	NA
Water [150C] [7732-18-5] [2x8cm-1] [Aromatics Filter] [SN110281261]	NA
MAX.MKS.BADSCANCOUNT	NA
MAX.MKS.LASERPP	NA

MONTROSE AIR QUALITY SERVICES

Spectrum	Date	Time	Temp	Pressure	Ethane [150C] [74-84-0] [2x8cm-1] [Aromatics Filter]	Ethylene Oxide (ppb)	Ethylene Oxide [150C] [75-21-8] [2x8cm-1] [Aromatics Filter]	Filter Interference.LAB	Methane [150C] [74-82-8] [2x8cm-1] [Aromatics Filter] [SN110281261]	Water [150C] [7732-18-5] [2x8cm-1] [Aromatics Filter] [SN110281261]
			(C)	(ATM)	Con (ppm)	Con (ppm)	Con (ppm)	Con (ppm)	Con (ppm)	Con (ppm)
ZERO DIRECT_0000001.LAB	3/5/2020	14:16:10	150.1	0.994	-0.029	6.558	0.007	0.947	-0.001	-3.753
ZERO DIRECT_0000002.LAB	3/5/2020	14:17:09	150.1	0.990	-0.014	1.994	0.002	0.934	0.003	6.515
ZERO DIRECT_0000003.LAB	3/5/2020	14:18:07	150.1	0.989	0.000	0.000	0.000	1.000	0.000	0.000
ZERO DIRECT_0000004.LAB	3/5/2020	14:19:06	150.1	0.989	-0.003	-4.321	-0.004	0.924	0.004	2.295
SAMPLE_0000005.LAB	3/5/2020	14:20:17	150.1	0.989	0.845	75.815	0.0758	1.486	12.943	8959.483
SAMPLE_0000006.LAB	3/5/2020	14:21:16	150.1	0.989	1.001	4.822	0.0048	0.897	15.549	13055.737
SAMPLE_0000007.LAB	3/5/2020	14:22:15	150.1	0.989	1.096	13.125	0.0131	0.877	15.750	13160.836
SAMPLE_0000008.LAB	3/5/2020	14:23:13	150.2	0.990	1.049	13.627	0.0136	0.925	15.784	13214.907
SAMPLE_0000009.LAB	3/5/2020	14:24:12	150.2	0.990	1.000	11.686	0.0117	0.906	15.885	13236.016
SAMPLE_0000010.LAB	3/5/2020	14:25:11	150.1	0.990	1.059	19.349	0.0193	0.908	15.778	13260.584
SAMPLE_0000011.LAB	3/5/2020	14:26:10	150.1	0.989	1.104	12.245	0.0122	0.924	15.685	13293.494
SAMPLE_0000012.LAB	3/5/2020	14:27:09	150.2	0.989	1.065	9.220	0.0092	0.958	15.605	13300.965
SAMPLE_0000013.LAB	3/5/2020	14:28:07	150.2	0.989	1.075	14.245	0.0142	0.895	15.638	13298.850
SAMPLE_0000014.LAB	3/5/2020	14:29:06	150.1	0.989	1.043	14.551	0.0146	0.964	15.603	13290.273
SAMPLE_0000015.LAB	3/5/2020	14:30:05	150.0	0.989	1.022	8.022	0.0080	0.977	15.779	13292.146
SAMPLE_0000016.LAB	3/5/2020	14:31:04	150.1	0.989	1.081	8.888	0.0089	0.923	15.549	13303.034
SAMPLE_0000017.LAB	3/5/2020	14:32:03	150.1	0.989	0.996	11.679	0.0117	0.966	15.418	13307.949
SAMPLE_0000018.LAB	3/5/2020	14:33:01	150.2	0.990	1.047	13.362	0.0134	0.925	15.345	13291.123
SAMPLE_0000019.LAB	3/5/2020	14:34:00	150.1	0.989	1.017	7.795	0.0078	0.932	15.180	13283.632
SAMPLE_0000020.LAB	3/5/2020	14:34:59	150.2	0.989	1.028	9.117	0.0091	0.945	15.431	13299.824
SAMPLE_0000021.LAB	3/5/2020	14:35:58	150.1	0.990	1.034	13.368	0.0134	0.895	15.250	13282.089
SAMPLE_0000022.LAB	3/5/2020	14:36:57	150.2	0.989	0.982	13.035	0.0130	0.931	15.210	13291.063
SAMPLE_0000023.LAB	3/5/2020	14:37:55	150.1	0.989	0.984	7.916	0.0079	0.932	15.206	13305.461
SAMPLE_0000024.LAB	3/5/2020	14:38:54	150.1	0.989	1.071	12.729	0.0127	0.861	15.328	13309.060
SAMPLE_0000025.LAB	3/5/2020	14:39:53	150.1	0.989	1.015	6.160	0.0062	0.896	15.174	13304.830
SAMPLE_0000026.LAB	3/5/2020	14:40:52	150.2	0.989	1.019	4.511	0.0045	0.929	15.458	13305.278
SAMPLE_0000027.LAB	3/5/2020	14:41:51	150.2	0.989	1.064	6.580	0.0066	0.905	15.492	13320.560
SAMPLE_0000028.LAB	3/5/2020	14:42:49	150.1	0.989	1.035	7.557	0.0076	0.922	15.486	13335.176
SAMPLE_0000029.LAB	3/5/2020	14:43:48	150.1	0.989	1.057	6.543	0.0065	0.905	15.343	13319.792
SAMPLE_0000030.LAB	3/5/2020	14:44:47	150.1	0.989	0.932	0.759	0.0008	0.979	15.249	13311.777
SAMPLE_0000031.LAB	3/5/2020	14:45:46	150.2	0.989	0.993	1.446	0.0014	0.925	15.018	13309.913
SAMPLE_0000032.LAB	3/5/2020	14:46:45	150.1	0.990	1.061	7.236	0.0072	0.938	15.122	13290.550
SAMPLE_0000033.LAB	3/5/2020	14:47:43	150.1	0.989	1.005	10.839	0.0108	0.896	15.129	13318.275
SAMPLE_0000034.LAB	3/5/2020	14:48:42	150.3	0.990	1.023	11.815	0.0118	0.986	15.243	13304.109
SAMPLE_0000035.LAB	3/5/2020	14:49:41	150.1	0.990	1.011	6.872	0.0069	0.912	15.216	13289.428
							0.0118			13143.4263
SAMPLE_0000036.LAB	3/5/2020	14:50:40	150.1	0.989	1.010	8.845	0.009	0.938	15.115	13300.853
ZERO SYSTEM_0000037.LAB	3/5/2020	14:52:28	150.1	0.989	0.004	-1.249	-0.001	0.924	0.038	68.689
CTS SYSTEM_0000038.LAB	3/5/2020	14:53:01	150.1	0.989	0.087	-5.409	-0.005	0.968	2.227	1008.295
CTS SYSTEM_0000039.LAB	3/5/2020	14:53:16	150.1	0.989	-0.206	301.041	0.301	0.919	51.697	3346.886
CTS SYSTEM_0000040.LAB	3/5/2020	14:53:30	150.2	0.990	0.147	494.632	0.495	0.687	101.516	-21.482
CTS SYSTEM_0000041.LAB	3/5/2020	14:53:45	150.3	0.990	0.050	498.519	0.499	0.745	101.633	-93.110
CTS SYSTEM_0000042.LAB	3/5/2020	14:54:00	150.1	0.990	0.053	483.772	0.484	0.686	101.577	-89.023
CTS SYSTEM_0000043.LAB	3/5/2020	14:54:14	150.2	0.990	0.138	492.322	0.492	0.706	101.658	-92.645

MONTROSE AIR QUALITY SERVICES

Test Run Calibration and System Performance Check

Run ID: RA Run #6
Date: 3/5/2020

Cylinder Standards Information:	Value	Cylinder ID
CTS Methane	100.3	Airgas CC-420194
Ethylene Oxide/513.9 Ethane	2.286	Airgas CC-717111
Ethylene Oxide dilution	228.6	Low level 100:1 dilution

Spectrum Comments	Analyte	Spectrum	Date	Time	Ethylene Oxide (ppb)	Ethylene Oxide (ppm)	Methane (ppm)	Pass +/- 5.0% Diff?
Interferometer Direct Zero N2	zero Ethylene/Ethane/CH4/H2O	ZERO DIRECT_0000012.LAB	3/5/2020	07:57:13	0.4892	0.0005	-0.0037	OK
Interferometer Direct CTS inject	512 ppm ethane/100.3 ppm CH4	CTS DIRECT_0000018.LAB	3/5/2020	07:59:56			103.7984	YES
Interferometer Direct Calibration Check Std inject	2.286 ppm ethylene oxide	CAL DIRECT_0000020.LAB	3/5/2020	08:00:26	2343.6518	2.3437		YES
Interferometer Direct Calibration Low Check Std. inject	228.6 ppb ethylene oxide	CAL DIRECT_0000027.LAB	3/5/2020	08:02:09	230.9721	0.2310		YES
Pre Test System Check:								
Sample System Zero N2	zero Ethylene/Ethane/CH4/H2O	ZERO SYSTEM_0000126.LAB	3/5/2020	13:59:59	-8.1650	-0.0082	0.0510	OK
Sample System CTS inject	512 ppm ethane/100 ppm CH4	CTS SYSTEM_0000139.LAB	3/5/2020	14:03:11			101.5083	YES
Sample System Calibration Check Std inject	2.286 ppm ethylene oxide							N/A
Sample SystemCalibration Low Check Std. inject	228.6 ppb ethylene oxide							N/A
Post-Test System Check:								
Sample System Zero N2	zero Ethylene/Ethane/CH4/H2O	ZERO SYSTEM_0000037.LAB	3/5/2020	14:52:28	-1.2490	-0.0012	0.0384	OK
Sample System CTS inject	512 ppm ethane/100 ppm CH4	CTS SYSTEM_0000043.LAB	3/5/2020	14:54:14			101.6582	YES
Sample System Calibration Check Std inject	2.286 ppm ethylene oxide							N/A
Sample SystemCalibration Low Check Std. inject	228.6 ppb ethylene oxide							N/A

MONTROSE
AIR QUALITY SERVICES

Dataset Name:	RA Run #7
Project Name:	Medline Waukegan ETO Abatement System Common Stack
Project Date:	3/5/2020
Sample Description:	Initial P.S. RA Certification Test Program-Common Stack
Sample Temperature (C):	N/A
Testing Professional:	William C. James
Analysis Date:	3/5/2020
Instrument Method:	USEPA Method 320 Starboost/MKS 2030
Quant Method:	StarBoost Ethylene Oxide [Aromatics Filter] (Modified)
Results Averaging:	Manual
Dataset Comments:	

Gas	Span
Ethane [150C] [74-84-0] [2x8cm-1] [Aromatics Filter]	NA
Ethylene Oxide (ppb)	NA
Ethylene Oxide [150C] [75-21-8] [2x8cm-1] [Aromatics Filter]	NA
Filter Interference.LAB	NA
Methane [150C] [74-82-8] [2x8cm-1] [Aromatics Filter] [SN110281261]	NA
Water [150C] [7732-18-5] [2x8cm-1] [Aromatics Filter] [SN110281261]	NA
MAX.MKS.BADSCANCOUNT	NA
MAX.MKS.LASERPP	NA

MONTROSE
AIR QUALITY SERVICES

Spectrum	Date	Time	Temp	Pressure	Ethane [150C] [74-84-0] [2x8cm-1] [Aromatics Filter]	Ethylene Oxide (ppb)	Ethylene Oxide [150C] [75-21-8] [2x8cm-1]	Filter Interference.LAB	Methane [150C] [74-82-8] [2x8cm-1] [Aromatics Filter]	Water [150C] [7732-18-5] [2x8cm-1] [Aromatics Filter]
			(C)	(ATM)	Con (ppm)	Con (ppm)	Con (ppm)	Con (ppm)	Con (ppm)	Con (ppm)
SAMPLE_0000059.LAB	3/5/2020	15:11:36	150.2	0.989	1.014	4.687	0.005	0.932	15.372	13167.121
SAMPLE_0000060.LAB	3/5/2020	15:12:35	150.1	0.989	1.104	9.333	0.0093	0.852	15.583	13188.385
SAMPLE_0000061.LAB	3/5/2020	15:13:33	150.1	0.989	1.009	14.299	0.0143	0.918	15.332	13204.377
SAMPLE_0000062.LAB	3/5/2020	15:14:32	150.3	0.990	0.997	1.081	0.0011	0.946	15.108	13211.408
SAMPLE_0000063.LAB	3/5/2020	15:15:31	150.2	0.990	0.993	5.659	0.0057	0.902	15.200	13232.824
SAMPLE_0000064.LAB	3/5/2020	15:16:30	150.1	0.989	1.058	10.025	0.0100	0.928	15.553	13248.070
SAMPLE_0000065.LAB	3/5/2020	15:17:29	150.2	0.990	1.090	8.351	0.0084	0.887	15.705	13246.539
SAMPLE_0000066.LAB	3/5/2020	15:18:28	150.1	0.989	1.021	12.894	0.0129	0.899	15.865	13257.270
SAMPLE_0000067.LAB	3/5/2020	15:19:26	150.2	0.990	1.100	10.848	0.0108	0.885	16.032	13243.814
SAMPLE_0000068.LAB	3/5/2020	15:20:25	150.2	0.989	1.029	11.254	0.0113	0.932	16.058	13252.007
SAMPLE_0000069.LAB	3/5/2020	15:21:24	150.2	0.990	1.070	9.038	0.0090	0.864	16.184	13259.592
SAMPLE_0000070.LAB	3/5/2020	15:22:23	150.1	0.990	1.117	16.465	0.0165	0.860	16.354	13234.377
SAMPLE_0000071.LAB	3/5/2020	15:23:22	150.1	0.990	1.079	10.582	0.0106	0.835	16.174	13253.738
SAMPLE_0000072.LAB	3/5/2020	15:24:20	150.2	0.990	1.104	11.236	0.0112	0.848	16.067	13252.349
SAMPLE_0000073.LAB	3/5/2020	15:25:19	150.2	0.990	1.038	19.980	0.0200	0.906	16.278	13244.689
SAMPLE_0000074.LAB	3/5/2020	15:26:18	150.2	0.990	1.111	19.677	0.0197	0.878	16.586	13238.406
SAMPLE_0000075.LAB	3/5/2020	15:27:17	150.1	0.990	1.159	19.295	0.0193	0.844	16.314	13213.946
SAMPLE_0000076.LAB	3/5/2020	15:28:16	150.1	0.990	1.095	16.313	0.0163	0.828	16.330	13202.447
SAMPLE_0000077.LAB	3/5/2020	15:29:14	150.0	0.990	1.099	17.881	0.0179	0.888	16.135	13175.196
SAMPLE_0000078.LAB	3/5/2020	15:30:13	150.1	0.990	1.097	16.005	0.0160	0.838	16.134	13164.722
SAMPLE_0000079.LAB	3/5/2020	15:31:12	150.1	0.990	1.134	13.887	0.0139	0.857	16.297	13168.538
SAMPLE_0000080.LAB	3/5/2020	15:32:11	150.1	0.990	1.071	11.965	0.0120	0.874	16.143	13129.972
SAMPLE_0000081.LAB	3/5/2020	15:33:09	150.0	0.990	1.084	7.479	0.0075	0.879	16.087	13118.062
SAMPLE_0000082.LAB	3/5/2020	15:34:08	150.1	0.990	1.033	10.011	0.0100	0.908	15.984	13104.079
SAMPLE_0000083.LAB	3/5/2020	15:35:07	150.1	0.990	1.120	17.855	0.0179	0.850	16.378	13110.460
SAMPLE_0000084.LAB	3/5/2020	15:36:06	150.3	0.990	1.060	11.809	0.0118	0.931	16.287	13094.515
SAMPLE_0000085.LAB	3/5/2020	15:37:05	150.3	0.990	1.109	6.401	0.0064	0.865	16.268	13066.018
SAMPLE_0000086.LAB	3/5/2020	15:38:04	150.1	0.990	1.086	12.298	0.0123	0.857	16.102	13036.653
SAMPLE_0000087.LAB	3/5/2020	15:39:02	150.1	0.990	1.048	16.468	0.0165	0.912	15.949	13026.616
SAMPLE_0000088.LAB	3/5/2020	15:40:01	150.1	0.990	1.050	12.921	0.0129	0.893	16.013	13027.672
SAMPLE_0000089.LAB	3/5/2020	15:41:00	150.1	0.990	1.122	11.042	0.0110	0.869	16.162	13028.211
SAMPLE_0000090.LAB	3/5/2020	15:41:59	150.1	0.990	1.082	10.047	0.0100	0.832	16.199	13019.156
							0.0123			13169.4873
SAMPLE_0000091.LAB	3/5/2020	15:42:58	150.2	0.990	1.096	12.634	0.013	0.825	16.116	13006.369
SAMPLE_0000092.LAB	3/5/2020	15:43:56	150.2	0.990	1.091	10.429	0.010	0.847	16.166	12985.449
ZERO SYSTEM_0000093.LAB	3/5/2020	15:46:17	150.1	0.990	-0.025	-2.681	-0.003	0.913	0.024	45.601
CTS SYSTEM_0000094.LAB	3/5/2020	15:47:16	150.1	0.990	0.030	-2.984	-0.003	0.868	0.398	78.869
CTS SYSTEM_0000095.LAB	3/5/2020	15:47:31	150.1	0.990	0.064	132.995	0.133	1.000	27.948	5376.177
CTS SYSTEM_0000096.LAB	3/5/2020	15:47:46	150.2	0.990	0.130	481.850	0.482	0.730	100.919	33.342
CTS SYSTEM_0000097.LAB	3/5/2020	15:48:00	150.1	0.990	0.103	496.604	0.497	0.609	101.731	-83.788
CTS SYSTEM_0000098.LAB	3/5/2020	15:48:15	150.1	0.991	0.166	493.945	0.494	0.646	101.585	-93.994

MONTROSE AIR QUALITY SERVICES

Test Run Calibration and System Performance Check

Run ID: RA Run #7
Date: 3/5/2020

Cylinder Standards Information:	Value	Cylinder ID
CTS Methane	100.3	Airgas CC-420194
Ethylene Oxide/513.9 Ethane	2.286	Airgas CC-717111
Ethylene Oxide dilution	228.6	Low level 100:1 dilution

Spectrum Comments	Analyte	Spectrum	Date	Time	Ethylene Oxide (ppb)	Ethylene Oxide (ppm)	Methane (ppm)	Pass +/- 5.0% Diff?
Interferometer Direct Zero N2	zero Ethylene/Ethane/CH4/H2O	ZERO DIRECT_0000012.LAB	3/5/2020	07:57:13	0.4892	0.0005	-0.0037	OK
Interferometer Direct CTS inject	512 ppm ethane/100.3 ppm CH4	CTS DIRECT_0000018.LAB	3/5/2020	07:59:56			103.7984	YES
Interferometer Direct Calibration Check Std inject	2.286 ppm ethylene oxide	CAL DIRECT_0000020.LAB	3/5/2020	08:00:26	2343.6518	2.3437		YES
Interferometer Direct Calibration Low Check Std. inject	228.6 ppb ethylene oxide	CAL DIRECT_0000027.LAB	3/5/2020	08:02:09	230.9721	0.2310		YES
Pre Test System Check:								
Sample System Zero N2	zero Ethylene/Ethane/CH4/H2O	ZERO SYSTEM_0000037.LAB	3/5/2020	14:52:28	-1.2490	-0.0012	0.0384	OK
Sample System CTS inject	512 ppm ethane/100 ppm CH4	CTS SYSTEM_0000043.LAB	3/5/2020	14:54:14			101.6582	YES
Sample System Calibration Check Std inject	2.286 ppm ethylene oxide							N/A
Sample SystemCalibration Low Check Std. inject	228.6 ppb ethylene oxide							N/A
Post-Test System Check:								
Sample System Zero N2	zero Ethylene/Ethane/CH4/H2O	ZERO SYSTEM_0000093.LAB	3/5/2020	15:46:17	-2.6807	-0.0027	0.0238	OK
Sample System CTS inject	512 ppm ethane/100 ppm CH4	CTS SYSTEM_0000098.LAB	3/5/2020	15:48:15			101.5850	YES
Sample System Calibration Check Std inject	2.286 ppm ethylene oxide							N/A
Sample SystemCalibration Low Check Std. inject	228.6 ppb ethylene oxide							N/A

MONTROSE
AIR QUALITY SERVICES

Dataset Name:	RA Run #8
Project Name:	Medline Waukegan ETO Abatement System Common Stack
Project Date:	3/5/2020
Sample Description:	Initial P.S. RA Certification Test Program-Common Stack
Sample Temperature (C):	N/A
Testing Professional:	William C. James
Analysis Date:	3/5/2020
Instrument Method:	USEPA Method 320 Starboost/MKS 2030
Quant Method:	StarBoost Ethylene Oxide [Aromatics Filter] (Modified)
Results Averaging:	Manual
Dataset Comments:	

Gas	Span
Ethane [150C] [74-84-0] [2x8cm-1] [Aromatics Filter]	NA
Ethylene Oxide (ppb)	NA
Ethylene Oxide [150C] [75-21-8] [2x8cm-1] [Aromatics Filter]	NA
Filter Interference.LAB	NA
Methane [150C] [74-82-8] [2x8cm-1] [Aromatics Filter] [SN110281261]	NA
Water [150C] [7732-18-5] [2x8cm-1] [Aromatics Filter] [SN110281261]	NA
MAX.MKS.BADSCANCOUNT	NA
MAX.MKS.LASERPP	NA

MONTROSE
AIR QUALITY SERVICES

Spectrum	Date	Time	Retention Time	Temp (C)	Pressure (ATM)	Ethane [150C] [74-84-0] [2x8cm-1] [Aromatics Filter] Con (ppm)	Ethylene Oxide (ppb) Con (ppm)	Ethylene Oxide [150C] [75-21-8] [2x8cm-1] [Aromatics Filter] Con (ppm)	Filter Interference.LAB Con (ppm)	[74-82-8] [2x8cm-1] [Aromatics Filter] [SN110281261] Con (ppm)	[7732-18-5] [2x8cm-1] [Aromatics Filter] [SN110281261] Con (ppm)
SAMPLE_0000118.LAB	3/5/2020	16:08:29	01:52:18.9	150.2	0.990	1.117	0.284	0.000	0.855	16.161	12606.305
SAMPLE_0000119.LAB	3/5/2020	16:09:28	01:53:17.8	150.2	0.990	1.072	7.863	0.0079	0.822	16.073	12614.810
SAMPLE_0000120.LAB	3/5/2020	16:10:27	01:54:16.6	150.1	0.990	1.097	15.988	0.0160	0.833	16.232	12610.497
SAMPLE_0000121.LAB	3/5/2020	16:11:25	01:55:15.5	150.1	0.990	1.124	9.617	0.0096	0.830	16.247	12604.944
SAMPLE_0000122.LAB	3/5/2020	16:12:24	01:56:14.2	150.1	0.990	1.097	8.794	0.0088	0.828	16.276	12585.621
SAMPLE_0000123.LAB	3/5/2020	16:13:23	01:57:13.1	150.3	0.990	1.169	14.575	0.0146	0.753	16.649	12583.299
SAMPLE_0000124.LAB	3/5/2020	16:14:22	01:58:11.8	150.3	0.990	1.162	6.743	0.0067	0.792	16.572	12572.496
SAMPLE_0000125.LAB	3/5/2020	16:15:21	01:59:10.6	150.3	0.990	1.121	6.281	0.0063	0.825	16.627	12551.256
SAMPLE_0000126.LAB	3/5/2020	16:16:19	02:00:09.4	150.2	0.990	1.127	10.858	0.0109	0.831	16.503	12543.553
SAMPLE_0000127.LAB	3/5/2020	16:17:18	02:01:08.2	150.1	0.990	1.093	7.284	0.0073	0.825	16.492	12533.996
SAMPLE_0000128.LAB	3/5/2020	16:18:17	02:02:07.0	150.1	0.990	1.110	2.037	0.0020	0.814	16.595	12527.690
SAMPLE_0000129.LAB	3/5/2020	16:19:16	02:03:05.8	150.1	0.991	1.129	15.671	0.0157	0.806	16.695	12516.412
SAMPLE_0000130.LAB	3/5/2020	16:20:15	02:04:04.6	150.1	0.990	1.131	7.024	0.0070	0.825	16.453	12514.310
SAMPLE_0000131.LAB	3/5/2020	16:21:13	02:05:03.4	150.2	0.990	1.064	5.859	0.0059	0.880	16.386	12505.322
SAMPLE_0000132.LAB	3/5/2020	16:22:12	02:06:02.3	150.2	0.990	1.085	6.150	0.0061	0.843	16.332	12507.416
SAMPLE_0000133.LAB	3/5/2020	16:23:11	02:07:01.1	150.1	0.990	1.119	8.184	0.0082	0.815	16.405	12505.849
SAMPLE_0000134.LAB	3/5/2020	16:24:10	02:07:59.8	150.3	0.990	1.148	12.748	0.0127	0.794	16.836	12506.886
SAMPLE_0000135.LAB	3/5/2020	16:25:09	02:08:58.6	150.3	0.990	1.144	2.035	0.0020	0.857	16.529	12485.435
SAMPLE_0000136.LAB	3/5/2020	16:26:07	02:09:57.4	150.2	0.990	1.103	6.047	0.0060	0.818	16.730	12481.836
SAMPLE_0000137.LAB	3/5/2020	16:27:06	02:10:56.2	150.2	0.990	1.128	10.347	0.0103	0.804	16.814	12472.673
SAMPLE_0000138.LAB	3/5/2020	16:28:05	02:11:55.0	150.1	0.990	1.136	7.261	0.0073	0.819	16.657	12470.934
SAMPLE_0000139.LAB	3/5/2020	16:29:04	02:12:53.8	150.1	0.990	1.129	7.786	0.0078	0.807	16.701	12476.993
SAMPLE_0000140.LAB	3/5/2020	16:30:03	02:13:52.7	150.1	0.990	1.110	13.494	0.0135	0.797	16.496	12479.074
SAMPLE_0000141.LAB	3/5/2020	16:31:01	02:14:51.5	150.2	0.990	1.122	10.663	0.0107	0.839	16.690	12467.442
SAMPLE_0000142.LAB	3/5/2020	16:32:00	02:15:50.3	150.1	0.990	1.147	12.642	0.0126	0.830	16.705	12450.628
SAMPLE_0000143.LAB	3/5/2020	16:32:59	02:16:49.1	150.1	0.990	1.103	4.299	0.0043	0.811	16.647	12468.650
SAMPLE_0000144.LAB	3/5/2020	16:33:58	02:17:47.8	150.2	0.990	1.108	11.341	0.0113	0.839	16.698	12471.019
SAMPLE_0000145.LAB	3/5/2020	16:34:57	02:18:46.6	150.3	0.990	1.128	7.218	0.0072	0.815	16.639	12466.351
SAMPLE_0000146.LAB	3/5/2020	16:35:55	02:19:45.5	150.2	0.990	1.108	7.056	0.0071	0.783	16.528	12467.045
SAMPLE_0000147.LAB	3/5/2020	16:36:54	02:20:44.3	150.1	0.990	1.119	11.384	0.0114	0.743	16.637	12484.353
SAMPLE_0000148.LAB	3/5/2020	16:37:53	02:21:43.1	150.2	0.990	1.099	12.458	0.0125	0.819	16.741	12495.599
SAMPLE_0000149.LAB	3/5/2020	16:38:52	02:22:41.9	150.1	0.990	1.179	9.007	0.0090	0.772	16.728	12483.157
								0.00899			**12513.08212**
SAMPLE_0000150.LAB	3/5/2020	16:39:51	02:23:40.7	150.1	0.990	1.114	7.314	0.007	0.834	16.755	12482.223
SAMPLE_0000151.LAB	3/5/2020	16:40:49	02:24:39.5	150.1	0.990	1.084	7.196	0.007	0.820	16.632	12506.450
ZERO SYSTEM_0000152.LAB	3/5/2020	16:41:56	02:25:46.0	150.3	0.991	-0.044	5.469	0.005	0.908	0.165	275.089
ZERO SYSTEM_0000153.LAB	3/5/2020	16:42:55	02:26:44.8	150.1	0.990	-0.061	-5.324	-0.005	0.964	0.298	803.069
CTS SYSTEM_0000154.LAB	3/5/2020	16:43:28	02:27:18.2	150.3	0.989	-0.009	-9.505	-0.010	1.003	0.051	822.574
CTS SYSTEM_0000155.LAB	3/5/2020	16:43:43	02:27:32.9	150.3	0.989	0.069	163.174	0.163	0.867	24.474	1203.492
CTS SYSTEM_0000156.LAB	3/5/2020	16:43:58	02:27:47.6	150.2	0.990	0.054	496.555	0.497	0.724	100.339	541.896

MONTROSE AIR QUALITY SERVICES

Test Run Calibration and System Performance Check

Run ID: RA Run #8
Date: 3/5/2020

Cylinder Standards Information:	Value	Cylinder ID
CTS Methane	100.3	Airgas CC-420194
Ethylene Oxide/513.9 Ethane	2.286	Airgas CC-717111
Ethylene Oxide dilution	228.6	Low level 100:1 dilution

Spectrum Comments	Analyte	Spectrum	Date	Time	Ethylene Oxide (ppb)	Ethylene Oxide (ppm)	Methane (ppm)	Pass +/- 5.0% Diff?
Interferometer Direct Zero N2	zero Ethylene/Ethane/CH4/H2O	ZERO DIRECT_0000012.LAB	3/5/2020	07:57:13	0.4892	0.0005	-0.0037	OK
Interferometer Direct CTS inject	512 ppm ethane/100.3 ppm CH4	CTS DIRECT_0000018.LAB	3/5/2020	07:59:56			103.7984	YES
Interferometer Direct Calibration Check Std inject	2.286 ppm ethylene oxide	CAL DIRECT_0000020.LAB	3/5/2020	08:00:26	2343.6518	2.3437		YES
Interferometer Direct Calibration Low Check Std. inject	228.6 ppb ethylene oxide	CAL DIRECT_0000027.LAB	3/5/2020	08:02:09	230.9721	0.2310		YES
Pre Test System Check:								
Sample System Zero N2	zero Ethylene/Ethane/CH4/H2O	ZERO SYSTEM_0000093.LAB	3/5/2020	15:46:17	-2.6807	-0.0027	0.0238	OK
Sample System CTS inject	512 ppm ethane/100 ppm CH4	CTS SYSTEM_0000098.LAB	3/5/2020	15:48:15			101.5850	YES
Sample System Calibration Check Std inject	2.286 ppm ethylene oxide							N/A
Sample SystemCalibration Low Check Std. inject	228.6 ppb ethylene oxide							N/A
Post-Test System Check:								
Sample System Zero N2	zero Ethylene/Ethane/CH4/H2O	ZERO SYSTEM_0000153.LAB	3/5/2020	16:42:55	-5.3235	-0.0053	0.2984	OK
Sample System CTS inject	512 ppm ethane/100 ppm CH4	CTS SYSTEM_0000156.LAB	3/5/2020	16:43:58			100.3392	YES
Sample System Calibration Check Std inject	2.286 ppm ethylene oxide							N/A
Sample SystemCalibration Low Check Std. inject	228.6 ppb ethylene oxide							N/A

MONTROSE
AIR QUALITY SERVICES

Dataset Name:	RA Run #9
Project Name:	Medline Waukegan ETO Abatement System Common Stack
Project Date:	3/5/2020
Sample Description:	Initial P.S. RA Certification Test Program-Common Stack
Sample Temperature (C):	N/A
Testing Professional:	William C. James
Analysis Date:	3/5/2020
Instrument Method:	USEPA Method 320 Starboost/MKS 2030
Quant Method:	StarBoost Ethylene Oxide [Aromatics Filter] (Modified)
Results Averaging:	Manual
Dataset Comments:	

Gas	Span
Ethane [150C] [74-84-0] [2x8cm-1] [Aromatics Filter]	NA
Ethylene Oxide (ppb)	NA
Ethylene Oxide [150C] [75-21-8] [2x8cm-1] [Aromatics Filter]	NA
Methane [150C] [74-82-8] [2x8cm-1] [Aromatics Filter] [SN110281261]	NA
Water [150C] [7732-18-5] [2x8cm-1] [Aromatics Filter] [SN110281261]	NA
MAX.MKS.BADSCANCOUNT	NA
MAX.MKS.LASERPP	NA

MONTROSE
AIR QUALITY SERVICES

Spectrum	Date	Time	Temp (C)	Pressure (ATM)	Ethane [150C] [74-84-0] [2x8cm-1] [Accumulation Filter-1] Con (ppm)	Ethylene Oxide (ppb) Con (ppb)	Ethylene Oxide [150C] [75-21-8] [2x8cm-1] Con (ppm)	Methane [150C] [74-82-8] [2x8cm-1] [Accumulation Filter-1] Con (ppm)	Water [150C] [7732-18-5] [2x8cm-1] [Accumulation Filter-1] Con (ppm)
SAMPLE_0000032.LAB	3/5/2020	17:07:50	150.2	0.988	1.223	10.719	0.0107	17.314	12260.113
SAMPLE_0000033.LAB	3/5/2020	17:08:05	150.3	0.989	1.225	-4.649	-0.0046	17.184	12266.844
SAMPLE_0000034.LAB	3/5/2020	17:08:19	150.3	0.990	1.228	13.595	0.0136	16.942	12319.440
SAMPLE_0000035.LAB	3/5/2020	17:09:29	150.4	0.988	1.280	7.215	0.0072	17.117	12483.012
SAMPLE_0000036.LAB	3/5/2020	17:10:28	150.3	0.989	1.199	7.272	0.0073	17.028	12303.258
SAMPLE_0000037.LAB	3/5/2020	17:11:27	150.2	0.989	1.235	8.959	0.0090	17.038	12478.313
SAMPLE_0000038.LAB	3/5/2020	17:12:26	150.4	0.988	1.215	9.839	0.0098	17.242	12402.248
SAMPLE_0000039.LAB	3/5/2020	17:13:25	150.3	0.988	1.257	15.284	0.0153	17.150	12599.408
SAMPLE_0000040.LAB	3/5/2020	17:14:23	150.3	0.988	1.191	18.084	0.0181	17.042	12500.449
SAMPLE_0000041.LAB	3/5/2020	17:15:22	150.5	0.988	1.213	8.914	0.0089	16.977	12522.487
SAMPLE_0000042.LAB	3/5/2020	17:16:21	150.4	0.988	1.248	21.034	0.0210	17.208	12445.444
SAMPLE_0000043.LAB	3/5/2020	17:17:20	150.3	0.988	1.218	13.833	0.0138	17.122	12491.988
SAMPLE_0000044.LAB	3/5/2020	17:18:19	150.2	0.988	1.223	14.357	0.0144	17.358	12406.621
SAMPLE_0000045.LAB	3/5/2020	17:19:17	150.3	0.988	1.234	9.570	0.0096	17.435	12408.018
SAMPLE_0000046.LAB	3/5/2020	17:20:16	150.3	0.988	1.253	10.740	0.0107	17.343	12460.539
SAMPLE_0000047.LAB	3/5/2020	17:21:15	150.3	0.988	1.220	11.187	0.0112	17.275	12356.110
SAMPLE_0000048.LAB	3/5/2020	17:22:14	150.3	0.988	1.229	14.375	0.0144	17.138	12475.436
SAMPLE_0000049.LAB	3/5/2020	17:23:13	150.2	0.988	1.222	13.413	0.0134	17.211	12476.696
SAMPLE_0000050.LAB	3/5/2020	17:24:11	150.3	0.988	1.234	21.041	0.0210	17.256	12476.430
SAMPLE_0000051.LAB	3/5/2020	17:25:10	150.4	0.988	1.250	14.195	0.0142	17.533	12456.184
SAMPLE_0000052.LAB	3/5/2020	17:26:09	150.4	0.990	1.255	9.741	0.0097	17.261	12407.375
SAMPLE_0000053.LAB	3/5/2020	17:27:08	150.2	0.990	1.269	9.045	0.0090	17.269	12433.728
SAMPLE_0000054.LAB	3/5/2020	17:28:07	150.1	0.990	1.274	17.714	0.0177	17.373	12451.486
SAMPLE_0000055.LAB	3/5/2020	17:29:05	150.1	0.990	1.267	17.034	0.0170	17.680	12486.066
SAMPLE_0000056.LAB	3/5/2020	17:30:04	150.2	0.990	1.305	22.607	0.0226	17.870	14037.595
SAMPLE_0000057.LAB	3/5/2020	17:31:03	150.1	0.989	1.265	-6.539	-0.0065	17.418	11674.245
SAMPLE_0000058.LAB	3/5/2020	17:32:02	150.1	0.988	1.231	8.587	0.0086	17.401	11836.140
SAMPLE_0000059.LAB	3/5/2020	17:33:01	150.3	0.988	1.202	21.178	0.0212	17.458	12310.530
SAMPLE_0000060.LAB	3/5/2020	17:33:59	150.3	0.988	1.261	22.702	0.0227	17.684	12377.935
SAMPLE_0000061.LAB	3/5/2020	17:34:58	150.5	0.988	1.246	15.207	0.0152	17.284	12422.996
SAMPLE_0000062.LAB	3/5/2020	17:35:57	150.3	0.988	1.244	17.487	0.0175	17.234	12335.497
SAMPLE_0000063.LAB	3/5/2020	17:36:56	150.4	0.988	1.264	23.073	0.0231	17.646	12416.407
SAMPLE_0000064.LAB	3/5/2020	17:37:55	150.4	0.988	1.262	21.797	0.0218	17.679	12349.181
							0.0134		12433.3783
SAMPLE_0000065.LAB	3/5/2020	17:38:53	150.4	0.988	1.286	24.997	0.025	17.613	12440.322
SAMPLE_0000066.LAB	3/5/2020	17:39:52	150.4	0.988	0.458	-0.038	0.000	6.056	8179.466
ZERO SYSTEM_0000067.LAB	3/5/2020	17:41:16	150.3	0.988	0.050	-0.970	-0.001	0.123	2375.296
ZERO SYSTEM_0000068.LAB	3/5/2020	17:42:14	150.2	0.988	0.090	-0.787	0.000	0.085	2007.138
ZERO SYSTEM_0000069.LAB	3/5/2020	17:43:13	150.3	0.988	0.070	-0.261	0.000	0.068	1461.678
CTS SYSTEM_0000070.LAB	3/5/2020	17:43:39	150.4	0.988	0.080	-0.543	0.000	0.087	1104.781
CTS SYSTEM_0000071.LAB	3/5/2020	17:43:53	150.4	0.988	0.249	45.540	0.046	15.528	1128.431
CTS SYSTEM_0000072.LAB	3/5/2020	17:44:08	150.4	0.988	0.113	379.920	0.380	92.183	1073.279
CTS SYSTEM_0000073.LAB	3/5/2020	17:44:23	150.4	0.988	0.222	422.631	0.423	99.711	931.700
CTS SYSTEM_0000074.LAB	3/5/2020	17:44:38	150.4	0.988	0.276	403.151	0.403	100.116	849.369
CTS SYSTEM_0000075.LAB	3/5/2020	17:44:52	150.3	0.988	0.222	426.835	0.427	100.183	800.212
SPIKE_0000076.LAB	3/5/2020	17:45:07	150.3	0.988	0.244	413.760	0.414	100.235	747.749
SPIKE_0000077.LAB	3/5/2020	17:45:22	150.4	0.988	0.211	431.254	0.431	99.850	688.315
SPIKE_0000078.LAB	3/5/2020	17:45:36	150.3	0.988	56.366	185.426	0.185	46.397	1066.298
SPIKE_0000079.LAB	3/5/2020	17:45:51	150.3	0.988	487.033	-14.292	-0.014	3.578	803.170
SPIKE_0000080.LAB	3/5/2020	17:46:06	150.3	0.988	515.989	-40.038	-0.040	0.017	723.751
SPIKE_0000081.LAB	3/5/2020	17:46:21	150.5	0.988	519.519	-32.838	-0.033	-0.265	692.772
SPIKE_0000082.LAB	3/5/2020	17:46:35	150.4	0.988	519.402	-19.624	-0.020	-0.366	646.699

MONTROSE
AIR QUALITY SERVICES

Spectrum	Date	Time	Temp	Pressure	84-0] [2x8cm-1]	Ethylene Oxide (ppb)	[150C] [75-21-8]	82-8] [2x8cm-1]	18-5] [2x8cm-1]
			(C)	(ATM)	Con (ppm)	Con (ppb)	Con (ppm)	Con (ppm)	Con (ppm)
SPIKE_0000083.LAB	3/5/2020	17:46:50	150.3	0.988	516.554	185.970	0.186	-0.285	634.728
SPIKE_0000084.LAB	3/5/2020	17:47:05	150.4	0.988	520.370	1865.482	1.865	-0.436	97.106
SPIKE_0000085.LAB	3/5/2020	17:47:19	150.4	0.988	520.917	1975.489	1.975	-0.460	60.972
SPIKE_0000086.LAB	3/5/2020	17:47:34	150.4	0.988	520.956	2009.381	2.009	-0.464	83.963
SPIKE_0000087.LAB	3/5/2020	17:47:49	150.4	0.988	521.245	2008.041	2.008	-0.462	65.442
SPIKE_0000088.LAB	3/5/2020	17:48:03	150.4	0.988	521.250	2028.580	2.029	-0.461	61.683
SPIKE_0000089.LAB	3/5/2020	17:48:18	150.3	0.988	521.098	2038.315	2.038	-0.458	85.405
SPIKE_0000090.LAB	3/5/2020	17:48:33	150.3	0.988	521.237	2056.977	2.057	-0.456	74.524
SPIKE_0000091.LAB	3/5/2020	17:48:47	150.4	0.988	521.545	2044.835	2.045	-0.484	59.071
SPIKE_0000092.LAB	3/5/2020	17:49:02	150.4	0.988	521.285	2055.690	2.056	-0.456	61.711
SPIKE_0000093.LAB	3/5/2020	17:49:17	150.2	0.988	521.077	2071.880	2.072	-0.473	82.148
SPIKE_0000094.LAB	3/5/2020	17:49:32	150.4	0.990	520.905	2070.015	2.070	-0.484	84.296
SPIKE_0000095.LAB	3/5/2020	17:49:46	150.4	0.990	528.379	2170.695	2.171	-0.484	60.149
SPIKE_0000096.LAB	3/5/2020	17:50:01	150.4	0.990	529.215	2194.247	2.194	-0.507	43.719
SPIKE_0000097.LAB	3/5/2020	17:50:16	150.4	0.990	529.481	2186.011	2.186	-0.498	59.882
SPIKE_0000098.LAB	3/5/2020	17:50:30	150.4	0.990	529.646	2186.374	2.186	-0.490	75.389
SPIKE_0000099.LAB	3/5/2020	17:50:45	150.2	0.990	529.619	2191.189	2.191	-0.503	59.212
SPIKE_0000100.LAB	3/5/2020	17:51:00	150.3	0.990	530.322	2203.033	2.203	-0.499	65.789
SPIKE_0000101.LAB	3/5/2020	17:51:14	150.1	0.990	528.213	2208.236	2.208	-0.474	77.114
SPIKE_0000102.LAB	3/5/2020	17:51:29	150.1	0.990	80.382	416.279	0.416	0.056	-83.267
SPIKE_0000103.LAB	3/5/2020	17:51:44	150.2	0.990	54.002	209.979	0.210	0.072	159.388
SPIKE_0000104.LAB	3/5/2020	17:51:59	150.3	0.990	53.708	222.697	0.223	0.058	159.180
SPIKE_0000105.LAB	3/5/2020	17:52:13	150.3	0.990	53.529	210.733	0.211	0.084	158.071

Table contains unaveraged concentration values.

Spectrum	Date	Time	Temp (C)	Pressure (ATM)	[illegible]		Ethylene Oxide (ppb)		[illegible]		Filter Interference 1.LAB		Filter Interference.LAB		[illegible]		[illegible]		MAX.MKS.BADSCANCOUNT	
					Con (ppm)	MDC#3 (ppm)	Con (ppb)	MDC#3 (ppm)	Con (ppm)	MDC#3 (ppm)	Con (ppm)	MDC#3 (ppm)	Con (ppm)	MDC#3 (ppm)	Con (ppm)	MDC#3 (ppm)	Con (ppm)	MDC#3 (ppm)	Con (ppm)	MDC#3 (ppm)
ZERO DIRECT_0000001.LAB	3/5/2020	17:56:05	150.1	0.995	0.000	0.000	0.000	Undefined	0.000	0.000	1.000	0.000	0.000	0.000	0.000	0.000	0.000	0.000	0.000	Undefined
ZERO DIRECT_0000002.LAB	3/5/2020	17:57:04	150.1	0.996	-0.086	-0.110	4.143	Undefined	0.004	0.011	0.349	0.111	0.626	0.095	-0.001	-0.027	-50.349	-44.827	0.000	Undefined
CTS DIRECT_0000003.LAB	3/5/2020	17:57:28	150.1	0.991	6.687	2.461	259.875	Undefined	0.260	0.442	2.137	3.390	-1.300	-2.894	24.270	1.121	-66.501	-541.365	0.000	Undefined
CTS DIRECT_0000004.LAB	3/5/2020	17:57:43	150.1	0.990	0.629	7.332	539.502	Undefined	0.540	1.268	-3.275	-9.683	4.077	8.265	102.208	3.716	-246.380	-1364.212	0.000	Undefined
CTS DIRECT_0000005.LAB	3/5/2020	17:57:57	150.1	0.991	0.485	7.427	530.880	Undefined	0.531	1.272	-3.430	-9.732	4.274	8.307	102.362	3.716	-232.354	-1365.352	0.000	Undefined
CTS DIRECT_0000006.LAB	3/5/2020	17:58:12	150.2	0.990	0.506	7.350	539.434	Undefined	0.539	1.271	-3.573	-9.714	4.288	8.291	102.436	3.737	-283.067	-1367.751	0.000	Undefined
CTS DIRECT_0000007.LAB	3/5/2020	17:58:27	150.2	0.991	0.328	7.414	533.165	Undefined	0.533	1.271	-3.427	-9.743	4.324	8.316	102.317	3.705	-258.377	-1360.163	0.000	Undefined
CTS DIRECT_0000008.LAB	3/5/2020	17:58:42	150.2	0.991	0.714	7.431	515.010	Undefined	0.515	1.260	-3.865	-9.704	4.604	8.283	102.309	3.709	-268.525	-1362.815	0.000	Undefined
CTS DIRECT_0000009.LAB	3/5/2020	17:58:56	150.2	0.991	0.369	7.344	539.759	Undefined	0.540	1.263	-3.397	-9.676	4.280	8.259	102.328	3.716	-267.471	-1361.365	0.000	Undefined
CTS DIRECT_0000010.LAB	3/5/2020	17:59:11	150.2	0.991	0.349	7.349	514.590	Undefined	0.515	1.270	-3.176	-9.670	4.085	8.254	102.427	3.701	-276.292	-1357.135	0.000	Undefined
CTS DIRECT_0000011.LAB	3/5/2020	17:59:26	150.2	0.990	0.071	7.370	542.728	Undefined	0.543	1.264	-2.916	-9.726	3.685	8.301	102.327	3.694	-252.780	-1364.605	0.000	Undefined
CTS DIRECT_0000012.LAB	3/5/2020	17:59:40	150.2	0.986	0.263	7.338	524.668	Undefined	0.525	1.264	-3.060	-9.657	3.832	8.243	102.542	3.701	-241.914	-1364.325	0.000	Undefined
CTS DIRECT_0000013.LAB	3/5/2020	17:59:55	150.3	0.995	2.854	4.252	431.927	Undefined	0.432	1.095	0.300	6.531	0.567	5.574	83.303	2.995	-183.999	-972.884	0.000	Undefined
CAL DIRECT_0000014.LAB	3/5/2020	18:00:10	150.1	0.995	343.745	9.199	1809.010	Undefined	1.809	0.042	-7.035	-4.875	8.033	4.161	1.392	0.080	13.350	847.809	0.000	Undefined
CAL DIRECT_0000015.LAB	3/5/2020	18:00:24	150.1	0.996	533.962	5.927	2236.060	Undefined	2.236	0.048	1.931	2.561	-1.718	-2.186	-0.521	-0.066	127.209	740.460	0.000	Undefined
CAL DIRECT_0000016.LAB	3/5/2020	18:00:39	150.1	0.996	535.665	5.589	2238.686	Undefined	2.239	0.046	1.456	2.583	-1.515	-2.205	-0.528	-0.056	55.549	699.385	0.000	Undefined
CAL DIRECT_0000017.LAB	3/5/2020	18:00:54	150.1	0.995	536.200	5.828	2229.324	Undefined	2.229	0.052	1.202	2.613	-1.050	-2.230	-0.564	-0.066	77.212	649.894	0.000	Undefined
CAL DIRECT_0000018.LAB	3/5/2020	18:01:09	150.1	0.996	534.541	5.846	2242.983	Undefined	2.243	0.054	1.904	2.607	-1.666	-2.225	-0.534	-0.046	66.212	681.949	0.000	Undefined
CAL DIRECT_0000019.LAB	3/5/2020	18:01:23	150.1	0.996	535.359	5.619	2229.343	Undefined	2.229	0.039	1.407	2.521	-1.285	-2.152	-0.528	-0.048	76.575	708.946	0.000	Undefined
CAL DIRECT_0000020.LAB	3/5/2020	18:01:38	150.1	0.995	536.117	5.697	2259.542	Undefined	2.260	0.045	1.011	2.501	-0.695	-2.135	-0.567	-0.050	30.067	686.162	0.000	Undefined
CAL DIRECT_0000021.LAB	3/5/2020	18:01:53	150.1	0.995	535.634	5.695	2236.719	Undefined	2.237	0.065	1.308	2.505	-1.158	-2.138	-0.567	-0.065	18.459	645.390	0.000	Undefined
CAL DIRECT_0000022.LAB	3/5/2020	18:02:07	150.1	0.988	538.670	5.415	2269.719	Undefined	2.270	0.051	1.717	2.424	-1.742	-2.069	-0.570	-0.052	98.542	691.516	0.000	Undefined
CAL DIRECT_0000023.LAB	3/5/2020	18:02:22	150.1	0.990	201.662	14.640	1172.781	Undefined	1.173	0.053	-15.103	-8.735	16.359	7.456	0.194	0.065	-93.858	-1452.230	0.000	Undefined
CAL DIRECT_0000024.LAB	3/5/2020	18:02:37	150.1	0.991	528.845	4.997	2308.243	Undefined	2.308	0.040	2.008	2.256	-2.169	-1.925	-0.563	-0.053	31.749	688.777	0.000	Undefined
CAL DIRECT_0000025.LAB	3/5/2020	18:02:51	150.1	0.991	529.394	5.154	2320.214	Undefined	2.320	0.035	1.610	2.195	-1.620	-1.873	-0.574	-0.043	53.893	676.744	0.000	Undefined
CAL DIRECT_0000026.LAB	3/5/2020	18:03:06	150.2	0.991	528.943	5.081	2325.065	Undefined	2.325	0.037	1.554	2.213	-1.627	-1.889	-0.574	-0.057	115.153	671.914	0.000	Undefined
CAL DIRECT_0000027.LAB	3/5/2020	18:03:21	150.1	0.988	531.603	4.907	2344.738	Undefined	2.345	0.046	0.311	2.211	-0.311	-1.887	-0.545	-0.082	58.515	615.545	0.000	Undefined
CAL DIRECT_0000028.LAB	3/5/2020	18:03:36	150.1	0.991	116.156	11.326	678.018	Undefined	0.678	0.057	-10.162	-7.556	11.487	6.449	0.132	0.105	83.123	1215.075	0.000	Undefined
CAL DIRECT_0000029.LAB	3/5/2020	18:03:50	150.3	0.990	51.757	1.895	246.840	Undefined	0.247	0.031	2.405	1.356	-1.442	-1.158	0.027	0.044	64.767	238.522	0.000	Undefined
CAL DIRECT_0000030.LAB	3/5/2020	18:04:05	150.1	0.991	51.725	1.883	240.851	Undefined	0.241	0.024	2.003	1.373	-1.037	-1.172	0.034	0.040	38.829	253.136	0.000	Undefined
CAL DIRECT_0000031.LAB	3/5/2020	18:04:20	150.2	0.990	52.004	1.929	240.407	Undefined	0.240	0.033	1.851	1.438	-0.970	-1.228	0.027	0.036	54.154	237.382	0.000	Undefined
CAL DIRECT_0000032.LAB	3/5/2020	18:04:34	150.1	0.991	51.573	1.955	227.921	Undefined	0.228	0.023	1.931	1.395	-0.963	-1.190	0.039	0.038	71.616	250.909	0.000	Undefined
CAL DIRECT_0000033.LAB	3/5/2020	18:04:49	150.1	0.991	51.110	1.948	243.768	Undefined	0.244	0.036	2.986	1.393	-2.055	-1.189	0.046	0.044	50.442	266.754	0.000	Undefined

MONTROSE AIR QUALITY SERVICES

Test Run Calibration and System Performance Check

Run ID: RA Run #9
Date: 3/5/2020

Cylinder Standards Information:	Value	Cylinder ID
CTS Methane	100.3	Airgas CC-420194
Ethylene Oxide/513.9 Ethane	2.286	Airgas CC-717111
Ethylene Oxide dilution	228.6	Low level 100:1 dilution

Spectrum Comments	Analyte	Spectrum	Date	Time	Ethylene Oxide (ppb)	Ethylene Oxide (ppm)	Methane (ppm)	Pass +/- 5.0% Diff?
Interferometer Direct Zero N2	zero Ethylene/Ethane/CH4/H2O	ZERO DIRECT_0000012.LAB	3/5/2020	07:57:13	0.4892	0.0005	-0.0037	OK
Interferometer Direct CTS inject	512 ppm ethane/100.3 ppm CH4	CTS DIRECT_0000018.LAB	3/5/2020	07:59:56			103.7984	YES
Interferometer Direct Calibration Check Std inject	2.286 ppm ethylene oxide	CAL DIRECT_0000020.LAB	3/5/2020	08:00:26	2343.6518	2.3437		YES
Interferometer Direct Calibration Low Check Std. inject	228.6 ppb ethylene oxide	CAL DIRECT_0000027.LAB	3/5/2020	08:02:09	230.9721	0.2310		YES
Pre Test System Check:								
Sample System Zero N2	zero Ethylene/Ethane/CH4/H2O	ZERO SYSTEM_0000153.LAB	3/5/2020	16:42:55	9.0070	0.0090	16.7285	OK
Sample System CTS inject	512 ppm ethane/100 ppm CH4	CTS SYSTEM_0000156.LAB	3/5/2020	16:43:58			16.6323	NO
Sample System Calibration Check Std inject	2.286 ppm ethylene oxide							N/A
Sample SystemCalibration Low Check Std. inject	228.6 ppb ethylene oxide							N/A
Post-Test System Check:								
Sample System Zero N2	zero Ethylene/Ethane/CH4/H2O	ZERO SYSTEM_0000069.LAB	3/5/2020	17:43:13	-0.2605	-0.0004	0.0682	OK
Sample System CTS inject	512 ppm ethane/100 ppm CH4	CTS SYSTEM_0000075.LAB	3/5/2020	17:44:52			100.1826	YES
Sample System Calibration Check Std inject	2.286 ppm ethylene oxide	SPIKE_0000101.LAB	3/5/2020	17:51:14	2208.2358	2.2082		YES
Sample SystemCalibration Low Check Std. inject	228.6 ppb ethylene oxide	SPIKE_0000104.LAB	3/5/2020	17:51:59	222.6970	0.2227		YES

APPENDIX E
MEDLINE CEMS, PROCESS, AND CD TEST DATA

MAX
Analytical Technologies

Dataset Name:	MAX CEMS RA Test Data Run #1
Project Name:	
Sample Date:	
Sample Description:	
Sample Name:	
Sample Temperature (C):	
Sample Volume (L):	
Testing Professional:	
Tube Serial Number:	
Analyzed Date:	
Instrument Method:	
Quant Method:	EMS-10 Ethylene Oxide [Medline] (Modified)
Results Averaging:	Off
MAX Average:	1
MAX Skip:	NA
Dataset Comments:	

Gas	Span
DP K-Factor	NA
Ethane [150C] [74-84-0] [2x8cm-1] [Aromatics Filter]	NA
Ethylene Oxide (ppb)	NA
Ethylene Oxide [150C] [75-21-8] [2x8cm-1] [Aromatics Filter]	NA
Ethylene Oxide Mass Emission Rate (lb/hr)	NA
Filter Interference.LAB	NA
Methane [150C] [74-82-8] [2x8cm-1] [Aromatics Filter] [SN110383419] 02-28	NA
Stack Velocity (ft/sec)	NA
Volumetric Stack Flow (scfm)	NA
Water [150C] [7732-18-5] [2x8cm-1] [Aromatics Filter] [SN110383419] 02-28	NA
MAX.MKS.LASERPP	NA
UD.Stack Differential Pressure (in H2O)	NA
UD.Stack Temperature (degrees F)	NA

MAX Analytical Technologies

Table contains unaveraged concentration values.

Spectrum	Date	Time	Retention Time	Temp (C)	Pressure (ATM)	Ethane [150C] [74-84-0] [2x8cm-1] [Aromatics Filter] Con (ppm)	Ethylene Oxide (ppb) Con (ppm)	Ethylene Oxide [150C] [75-21-8] [2x8cm-1] [Aromatics Filter] Con (ppm)	Ethylene Oxide Mass Emission Rate (lb/hr) Con (ppm)	Methane [150C] [74-82-8] [2x8cm-1] [Aromatics Filter] [SN1103834191 02- Con (ppm)	Stack Velocity (ft/sec) Con (ppm)	Volumetric Stack Flow (scfm) Con (ppm)	Water [150C] [7732-18-5] [2x8cm-1] [Aromatics Filter] [SN1103834191 02- Con (ppm)	UD.Stack Differential Pressure (in H2O) Con (ppm)
ZERO DIRECT_0000001.LAB	3/5/2020	09:17:48	00:00:00.0	149.5	0.981	0.002	2.821	0.003	0.001	0.107	47.437	53638.904	-25.161	0.932
ZERO DIRECT_0000002.LAB	3/5/2020	09:18:02	00:00:14.7	149.6	0.982	-0.009	-0.372	0.000	0.000	0.014	46.275	52328.686	14.394	0.899
ZERO DIRECT_0000003.LAB	3/5/2020	09:18:17	00:00:29.4	149.5	0.981	-0.025	-1.290	-0.001	0.000	0.104	45.502	51457.142	-7.479	0.877
ZERO DIRECT_0000004.LAB	3/5/2020	09:18:32	00:00:44.1	149.5	0.982	0.007	1.898	0.002	0.001	0.141	45.888	51892.721	-86.029	0.888
ZERO DIRECT_0000005.LAB	3/5/2020	09:18:46	00:00:58.8	149.6	0.982	-0.015	3.087	0.003	0.001	0.042	43.874	49618.194	-127.670	0.833
ZERO DIRECT_0000006.LAB	3/5/2020	09:19:01	00:01:13.6	149.5	0.982	-0.022	-0.737	-0.001	0.000	-0.069	47.835	54101.114	15.503	0.944
ZERO DIRECT_0000007.LAB	3/5/2020	09:19:16	00:01:28.3	149.5	0.982	-0.008	1.126	0.001	0.000	0.112	48.084	54376.218	-185.918	0.951
ZERO DIRECT_0000008.LAB	3/5/2020	09:19:31	00:01:43.0	149.5	0.981	0.009	-1.064	-0.001	0.000	0.331	49.925	56444.928	-134.269	1.005
ZERO DIRECT_0000009.LAB	3/5/2020	09:19:45	00:01:57.8	149.7	0.982	-0.014	3.008	0.003	0.001	0.016	45.845	51804.108	-169.349	0.886
ZERO DIRECT_0000010.LAB	3/5/2020	09:20:00	00:02:12.6	149.8	0.981	0.007	0.754	0.001	0.000	0.219	46.804	52868.428	-296.336	0.913
ZERO DIRECT_0000011.LAB	3/5/2020	09:20:15	00:02:27.2	149.9	0.982	0.017	1.248	0.001	0.000	0.086	46.603	52621.315	-161.319	0.907
ZERO DIRECT_0000012.LAB	3/5/2020	09:20:30	00:02:41.9	150.1	0.982	-0.025	2.759	0.003	0.001	-0.009	42.259	47698.175	1.501	0.790
ZERO DIRECT_0000013.LAB	3/5/2020	09:20:44	00:02:56.6	150.2	0.981	-0.022	0.835	0.001	0.000	0.038	46.276	52215.307	27.700	0.898
ZERO DIRECT_0000014.LAB	3/5/2020	09:20:59	00:03:11.4	150.2	0.982	0.009	5.041	0.005	0.002	0.088	44.477	50168.199	-44.502	0.848
ZERO DIRECT_0000015.LAB	3/5/2020	09:21:14	00:03:26.1	150.3	0.981	0.005	1.325	0.001	0.000	0.093	46.234	52135.423	-79.494	0.896
ZERO DIRECT_0000016.LAB	3/5/2020	09:21:28	00:03:40.8	150.3	0.981	0.003	3.157	0.003	0.001	0.156	46.865	52848.711	-85.641	0.914
FILTER SPECTRUM_0000017.LAB	3/5/2020	09:21:43	00:03:55.5	150.2	0.982	0.000	0.000	0.000	0.000	0.000	45.115	50886.832	0.000	0.865
FILTER SPECTRUM_0000018.LAB	3/5/2020	09:21:58	00:04:10.2	150.2	0.981	0.003	0.381	0.000	0.000	0.074	48.209	54388.031	-58.263	0.953
STACK EMISSIONS_0000019.LAB	3/5/2020	09:23:00	00:05:12.0	149.8	0.982	-0.023	56.968	0.0570	0.0206	-0.042	46.735	52779.236	-168.956	0.911
STACK EMISSIONS_0000020.LAB	3/5/2020	09:23:58	00:06:10.9	149.7	0.981	-0.052	57.806	0.0578	0.0206	-0.162	45.916	51882.227	-90.118	0.888
STACK EMISSIONS_0000021.LAB	3/5/2020	09:24:57	00:07:09.7	149.6	0.982	-0.038	56.531	0.0565	0.0199	-0.083	45.474	51390.654	-139.372	0.876
STACK EMISSIONS_0000022.LAB	3/5/2020	09:25:56	00:08:08.6	149.5	0.981	-0.040	54.013	0.0540	0.0184	-0.118	43.862	49574.154	-90.005	0.833
STACK EMISSIONS_0000023.LAB	3/5/2020	09:26:55	00:09:07.5	150.0	0.982	-0.038	50.121	0.0501	0.0186	-0.064	47.971	54135.060	-62.988	0.946
STACK EMISSIONS_0000024.LAB	3/5/2020	09:27:54	00:10:06.4	150.3	0.982	-0.045	51.329	0.0513	0.0189	-0.105	47.536	53580.548	7.937	0.933
STACK EMISSIONS_0000025.LAB	3/5/2020	09:28:53	00:11:05.3	150.1	0.982	-0.044	49.027	0.0490	0.0171	-0.181	45.089	50857.825	0.850	0.865
STACK EMISSIONS_0000026.LAB	3/5/2020	09:29:52	00:12:04.2	150.0	0.981	-0.047	48.967	0.0490	0.0179	-0.212	47.133	53209.043	-23.183	0.922
STACK EMISSIONS_0000027.LAB	3/5/2020	09:30:51	00:13:03.1	149.7	0.981	-0.040	46.871	0.0469	0.0162	0.029	44.558	50336.612	-93.223	0.851
STACK EMISSIONS_0000028.LAB	3/5/2020	09:31:50	00:14:02.0	149.6	0.982	-0.047	44.063	0.0441	0.0156	0.022	45.694	51642.280	-84.937	0.882
STACK EMISSIONS_0000029.LAB	3/5/2020	09:32:48	00:15:00.8	149.8	0.982	-0.046	43.077	0.0431	0.0158	0.038	47.236	53312.604	-74.987	0.925
STACK EMISSIONS_0000030.LAB	3/5/2020	09:33:47	00:15:59.7	150.2	0.982	-0.051	42.727	0.0427	0.0151	0.064	45.795	51626.190	46.133	0.884
STACK EMISSIONS_0000031.LAB	3/5/2020	09:34:46	00:16:58.6	150.2	0.981	-0.044	41.415	0.0414	0.0148	0.093	46.155	52027.028	48.899	0.894
STACK EMISSIONS_0000032.LAB	3/5/2020	09:35:45	00:17:57.5	149.8	0.981	-0.039	39.596	0.0396	0.0133	0.133	43.531	49115.025	-35.991	0.823
STACK EMISSIONS_0000033.LAB	3/5/2020	09:36:44	00:18:56.4	149.7	0.981	-0.057	38.065	0.0381	0.0141	0.138	47.865	54053.652	22.135	0.943
STACK EMISSIONS_0000034.LAB	3/5/2020	09:37:43	00:19:55.3	149.7	0.982	-0.059	36.374	0.0364	0.0129	0.070	45.923	51884.957	35.361	0.889
STACK EMISSIONS_0000035.LAB	3/5/2020	09:38:42	00:20:54.1	149.8	0.982	-0.070	35.050	0.0351	0.0118	0.031	43.336	48919.863	108.261	0.818
STACK EMISSIONS_0000036.LAB	3/5/2020	09:39:41	00:21:53.0	150.1	0.981	-0.047	34.077	0.0341	0.0118	0.192	44.960	50675.885	51.818	0.861
STACK EMISSIONS_0000037.LAB	3/5/2020	09:40:40	00:22:52.0	150.3	0.981	-0.063	34.400	0.0344	0.0123	0.136	46.417	52308.777	112.296	0.901
STACK EMISSIONS_0000038.LAB	3/5/2020	09:41:38	00:23:50.8	150.0	0.981	-0.061	33.082	0.0331	0.0123	0.164	48.037	54197.701	103.716	0.948
STACK EMISSIONS_0000039.LAB	3/5/2020	09:42:37	00:24:49.7	149.7	0.981	-0.078	31.537	0.0315	0.0114	0.015	46.501	52496.153	95.269	0.904

STACK EMISSIONS_0000040.LAB	3/5/2020	09:43:36	00:25:48.6	149.7	0.982	-0.072	29.797	0.0298	0.0101	0.039	43.530	49180.878	140.700	0.824
STACK EMISSIONS_0000041.LAB	3/5/2020	09:44:35	00:26:47.5	149.8	0.981	-0.077	29.277	0.0293	0.0103	0.066	45.481	51343.578	107.512	0.876
STACK EMISSIONS_0000042.LAB	3/5/2020	09:45:34	00:27:46.4	150.1	0.981	-0.062	28.325	0.0283	0.0103	0.173	46.897	52874.260	115.294	0.915
STACK EMISSIONS_0000043.LAB	3/5/2020	09:46:33	00:28:45.4	150.3	0.981	-0.068	28.766	0.0288	0.0104	0.168	46.989	52943.964	128.460	0.917
STACK EMISSIONS_0000044.LAB	3/5/2020	09:47:32	00:29:44.2	150.0	0.981	-0.078	26.776	0.0268	0.0093	0.016	44.800	50525.203	181.227	0.857
STACK EMISSIONS_0000045.LAB	3/5/2020	09:48:31	00:30:43.0	149.8	0.981	-0.060	26.073	0.0261	0.0093	0.116	46.106	52038.562	21.410	0.893
STACK EMISSIONS_0000046.LAB	3/5/2020	09:49:30	00:31:41.9	149.7	0.980	-0.050	24.911	0.0249	0.0088	0.275	45.740	51659.817	-128.415	0.883
STACK EMISSIONS_0000047.LAB	3/5/2020	09:50:28	00:32:40.8	149.8	0.980	-0.060	23.580	0.0236	0.0081	0.301	44.194	49865.482	-54.711	0.841
STACK EMISSIONS_0000048.LAB	3/5/2020	09:51:27	00:33:39.7	150.1	0.981	-0.077	26.696	0.0267	0.0094	0.055	45.465	51226.764	188.622	0.874
STACK EMISSIONS_0000049.LAB	3/5/2020	09:52:26	00:34:38.6	150.3	0.981	-0.039	27.397	0.0274	0.0095	0.314	44.656	50308.675	-61.034	0.852
								0.03860	**0.01370**			**51676.53731**		
STACK EMISSIONS_0000050.LAB	3/5/2020	09:53:25	00:35:37.5	150.0	0.981	-0.058	27.514	0.028	0.010	0.193	45.348	51147.566	4.144	0.872

MAX
Analytical Technologies

Dataset Name:	MAX CEMS RA Test Data Run #2
Project Name:	
Project Date:	
Sample Description:	
Sample Temperature (C):	
Testing Professional:	
Analysis Date:	
Instrument Method:	
Quant Method:	EMS-10 Ethylene Oxide [Medline] (Modified)
Results Averaging:	Off
Dataset Comments:	

Gas	Span
DP K-Factor	NA
Ethane [150C] [74-84-0] [2x8cm-1] [Aromatics Filter]	NA
Ethylene Oxide (ppb)	NA
Ethylene Oxide [150C] [75-21-8] [2x8cm-1] [Aromatics Filter]	NA
Ethylene Oxide Mass Emission Rate (lb/hr)	NA
Filter Interference.LAB	NA
Methane [150C] [74-82-8] [2x8cm-1] [Aromatics Filter] [SN110383419] 02-28	NA
Stack Velocity (ft/sec)	NA
Volumetric Stack Flow (scfm)	NA
Water [150C] [7732-18-5] [2x8cm-1] [Aromatics Filter] [SN110383419] 02-28	NA
MAX.MKS.LASERPP	NA
UD.Stack Differential Pressure (in H2O)	NA
UD.Stack Temperature (degrees F)	NA

MAX Analytical Technologies

Table contains unaveraged concentration values.

Spectrum	Date	Time	Temp (C)	Pressure (ATM)	Ethane [150C] [74-84-0] [2x8cm-1] [Aromatics Filter] Con (ppm)	Ethylene Oxide (ppb) Con (ppm)	Ethylene Oxide [150C] [75-21-8] [2x8cm-1] [Aromatics Filter] Con (ppm)	Ethylene Oxide Mass Emission Rate (lb/hr) Con (ppm)	Methane [150C] [7482-8] [2x8cm-1] [Aromatics Filter] [SN110383419] 02-28 Con (ppm)	Stack Velocity (ft/sec) Con (ppm)	Volumetric Stack Flow (scfm) Con (ppm)	Water [150C] [7732-18-5] [2x8cm-1] [Aromatics Filter] [SN110383419] 02-28 Con (ppm)	UD.Stack Differential Pressure (in H2O) Con (ppm)
ZERO DIRECT_0000001.LAB	3/5/2020	10:13:13	149.7	0.980	-0.021	-0.674	-0.001	0.000	-0.006	44.665	50375.331	53.098	0.853
ZERO DIRECT_0000002.LAB	3/5/2020	10:13:27	149.8	0.980	-0.016	-2.511	-0.003	-0.001	0.045	45.372	51147.399	84.155	0.872
ZERO DIRECT_0000003.LAB	3/5/2020	10:13:42	150.0	0.980	-0.024	-1.206	-0.001	0.000	-0.042	46.068	51914.922	195.068	0.891
ZERO DIRECT_0000004.LAB	3/5/2020	10:13:57	150.0	0.980	-0.038	-2.945	-0.003	-0.001	-0.121	44.445	50082.247	202.663	0.847
ZERO DIRECT_0000005.LAB	3/5/2020	10:14:11	150.1	0.980	-0.033	0.324	0.000	0.000	-0.186	46.239	52065.876	190.500	0.895
ZERO DIRECT_0000006.LAB	3/5/2020	10:14:26	150.2	0.980	-0.016	-0.426	0.000	0.000	0.178	47.113	53040.598	102.433	0.920
ZERO DIRECT_0000007.LAB	3/5/2020	10:14:41	150.2	0.980	-0.033	-1.512	-0.002	-0.001	0.044	45.912	51676.713	175.576	0.886
ZERO DIRECT_0000008.LAB	3/5/2020	10:14:56	150.3	0.980	-0.025	-2.822	-0.003	-0.001	-0.161	46.412	52237.720	231.405	0.900
ZERO DIRECT_0000009.LAB	3/5/2020	10:15:10	150.3	0.980	-0.024	0.388	0.000	0.000	0.063	48.053	54067.539	95.008	0.946
ZERO DIRECT_0000010.LAB	3/5/2020	10:15:25	150.4	0.980	-0.030	-0.046	0.000	0.000	-0.106	47.175	53084.072	81.386	0.921
ZERO DIRECT_0000011.LAB	3/5/2020	10:15:40	150.3	0.980	-0.005	-2.193	-0.002	-0.001	0.027	45.221	50890.456	142.939	0.867
ZERO DIRECT_0000012.LAB	3/5/2020	10:15:54	150.3	0.980	-0.027	-2.318	-0.002	-0.001	-0.123	45.777	51534.163	46.200	0.882
ZERO DIRECT_0000013.LAB	3/5/2020	10:16:09	150.1	0.980	-0.008	-2.041	-0.002	-0.001	0.062	47.760	53790.915	10.532	0.938
ZERO DIRECT_0000014.LAB	3/5/2020	10:16:24	150.1	0.980	-0.010	-0.642	-0.001	0.000	0.030	44.212	49803.265	94.173	0.840
ZERO DIRECT_0000015.LAB	3/5/2020	10:16:39	150.1	0.980	-0.014	-6.013	-0.006	-0.002	-0.024	46.258	52120.156	18.940	0.896
ZERO DIRECT_0000016.LAB	3/5/2020	10:16:53	149.9	0.980	-0.013	-1.591	-0.002	-0.001	-0.012	46.806	52753.429	29.068	0.912
FILTER SPECTRUM_0000017.LAB	3/5/2020	10:17:08	149.9	0.980	0.000	0.000	0.000	0.000	0.000	45.005	50730.271	0.000	0.862
FILTER SPECTRUM_0000018.LAB	3/5/2020	10:17:23	149.9	0.980	-0.001	-4.197	-0.004	-0.002	-0.053	47.824	53919.297	-27.312	0.941
STACK EMISSIONS_0000019.LAB	3/5/2020	10:18:25	149.8	0.981	-0.035	18.877	0.0189	0.007	-0.127	45.885	51774.926	-36.658	0.887
STACK EMISSIONS_0000020.LAB	3/5/2020	10:19:24	149.9	0.981	-0.076	20.974	0.0210	0.008	-0.425	49.198	55478.788	216.252	0.981
STACK EMISSIONS_0000021.LAB	3/5/2020	10:20:23	150.3	0.980	-0.070	21.670	0.0217	0.008	-0.305	46.006	51806.864	160.442	0.889
STACK EMISSIONS_0000022.LAB	3/5/2020	10:21:21	150.7	0.980	-0.047	20.331	0.0203	0.007	-0.273	45.799	51543.776	165.318	0.883
STACK EMISSIONS_0000023.LAB	3/5/2020	10:22:20	150.2	0.980	-0.040	21.064	0.0211	0.007	-0.085	43.875	49415.971	1.035	0.831
STACK EMISSIONS_0000024.LAB	3/5/2020	10:23:19	150.0	0.980	-0.063	21.753	0.0218	0.008	-0.237	45.692	51501.285	10.463	0.881
STACK EMISSIONS_0000025.LAB	3/5/2020	10:24:18	149.8	0.980	-0.052	20.387	0.0204	0.007	-0.300	44.870	50616.880	31.283	0.859
STACK EMISSIONS_0000026.LAB	3/5/2020	10:25:17	149.8	0.980	-0.064	20.224	0.0202	0.007	-0.213	47.450	53533.242	19.357	0.931
STACK EMISSIONS_0000027.LAB	3/5/2020	10:26:16	150.2	0.980	-0.060	21.791	0.0218	0.008	-0.404	44.822	50493.614	125.521	0.857
STACK EMISSIONS_0000028.LAB	3/5/2020	10:27:15	150.4	0.980	-0.072	21.821	0.0218	0.008	-0.403	44.912	50524.251	255.425	0.858
STACK EMISSIONS_0000029.LAB	3/5/2020	10:28:14	150.3	0.980	-0.078	21.648	0.0216	0.008	-0.409	45.658	51399.192	204.816	0.879
STACK EMISSIONS_0000030.LAB	3/5/2020	10:29:13	150.0	0.980	-0.082	19.532	0.0195	0.007	-0.429	45.941	51755.887	209.809	0.887
STACK EMISSIONS_0000031.LAB	3/5/2020	10:30:11	149.8	0.980	-0.082	17.961	0.0180	0.006	-0.448	45.462	51250.315	159.012	0.874
STACK EMISSIONS_0000032.LAB	3/5/2020	10:31:10	149.8	0.980	-0.089	19.455	0.0195	0.006	-0.571	43.069	48579.595	243.323	0.811
STACK EMISSIONS_0000033.LAB	3/5/2020	10:32:09	150.1	0.980	-0.090	18.507	0.0185	0.007	-0.535	46.122	51939.152	229.121	0.892
STACK EMISSIONS_0000034.LAB	3/5/2020	10:33:08	150.4	0.980	-0.084	20.362	0.0204	0.008	-0.467	47.772	53740.936	242.950	0.938

WSZ0ET-063754RT-714 181 of 260

STACK EMISSIONS_0000035.LAB	3/5/2020	10:34:07	150.3	0.980	-0.094	20.608	0.0206	0.007	-0.664	42.883	48267.953	319.020	0.805
STACK EMISSIONS_0000036.LAB	3/5/2020	10:35:06	149.9	0.980	-0.096	18.562	0.0186	0.007	-0.663	45.862	51659.172	300.962	0.885
STACK EMISSIONS_0000037.LAB	3/5/2020	10:36:05	149.8	0.980	-0.104	19.676	0.0197	0.007	-0.728	48.591	54772.383	284.229	0.963
STACK EMISSIONS_0000038.LAB	3/5/2020	10:37:04	149.7	0.980	-0.103	16.462	0.0165	0.006	-0.684	44.549	50233.168	253.181	0.850
STACK EMISSIONS_0000039.LAB	3/5/2020	10:38:03	150.1	0.980	-0.098	19.633	0.0196	0.007	-0.627	45.759	51530.696	210.224	0.882
							0.02006	**0.00709**			**51515.14500**		
STACK EMISSIONS_0000040.LAB	3/5/2020	10:39:01	150.4	0.980	-0.078	20.194	0.02019	0.007	-0.405	46.228	51996.024	125.771	0.894
STACK EMISSIONS_0000041.LAB	3/5/2020	10:40:00	150.4	0.980	-0.089	19.969	0.0200	0.007	-0.572	43.994	49483.193	151.129	0.833
STACK EMISSIONS_0000042.LAB	3/5/2020	10:40:59	150.0	0.979	-0.093	19.725	0.0197	0.007	-0.608	43.778	49288.351	165.840	0.828
STACK EMISSIONS_0000043.LAB	3/5/2020	10:41:58	149.8	0.980	-0.093	18.251	0.0183	0.006	-0.537	46.056	51892.846	96.018	0.890

MAX
Analytical Technologies

Dataset Name:	MAX CEMS RA Test Data Run #3
Project Name:	
Project Date:	
Sample Description:	
Sample Temperature (C):	
Testing Professional:	
Analysis Date:	
Instrument Method:	
Quant Method:	EMS-10 Ethylene Oxide [Medline] (Modified)
Results Averaging:	Off
Dataset Comments:	

Gas	Span
DP K-Factor	NA
Ethane [150C] [74-84-0] [2x8cm-1] [Aromatics Filter]	NA
Ethylene Oxide (ppb)	NA
Ethylene Oxide [150C] [75-21-8] [2x8cm-1] [Aromatics Filter]	NA
Ethylene Oxide Mass Emission Rate (lb/hr)	NA
Filter Interference.LAB	NA
Methane [150C] [74-82-8] [2x8cm-1] [Aromatics Filter] [SN110383419] 02-28	NA
Stack Velocity (ft/sec)	NA
Volumetric Stack Flow (scfm)	NA
Water [150C] [7732-18-5] [2x8cm-1] [Aromatics Filter] [SN110383419] 02-28	NA
MAX.MKS.LASERPP	NA
UD.Stack Differential Pressure (in H2O)	NA
UD.Stack Temperature (degrees F)	NA

MAX Analytical Technologies

Table contains unaveraged concentration values.

Spectrum	Date	Time	Temp	Pressure	Ethane [150C] [74-84-0] [2x8cm-1] [Aromatics Filter]	Ethylene Oxide (ppb)	Ethylene Oxide [150C] [75-21-8] [2x8cm-1]	Ethylene Oxide Mass Emission Rate (lb/hr)	Methane [150C] [7482-8] [2x8cm-1] [Aromatics Filter]	Volumetric Stack Flow (scfm)	Water [150C] [7732-18-5] [2x8cm-1] [Aromatics Filter]	UD.Stack Differential Pressure (in H2O)
			(C)	(ATM)	Con (ppm)	Con (ppm)	Con (ppm)	Con (ppm)	Con (ppm)	Con (ppm)	Con (ppm)	Con (ppm)
ZERO DIRECT_0000001.LAB	3/5/2020	11:25:44	149.8	0.979	0.024	-3.889	-0.004	-0.001	0.212	53140.474	-18.765	0.920
ZERO DIRECT_0000002.LAB	3/5/2020	11:25:58	149.8	0.979	-0.001	-4.226	-0.004	-0.001	0.160	51667.059	-57.457	0.884
ZERO DIRECT_0000003.LAB	3/5/2020	11:26:13	149.8	0.979	0.034	-5.544	-0.006	-0.002	0.323	52185.091	-58.694	0.896
ZERO DIRECT_0000004.LAB	3/5/2020	11:26:28	149.8	0.979	0.046	-4.147	-0.004	-0.001	0.515	51696.314	-168.949	0.884
ZERO DIRECT_0000005.LAB	3/5/2020	11:26:43	149.8	0.979	0.038	-5.075	-0.005	-0.002	0.495	52852.013	-170.553	0.913
ZERO DIRECT_0000006.LAB	3/5/2020	11:26:57	150.0	0.979	0.033	-2.139	-0.002	-0.001	0.181	50254.450	-196.207	0.850
ZERO DIRECT_0000007.LAB	3/5/2020	11:27:12	150.1	0.979	0.029	-2.131	-0.002	-0.001	0.243	50563.729	-112.639	0.858
ZERO DIRECT_0000008.LAB	3/5/2020	11:27:27	150.2	0.979	0.034	-1.445	-0.001	-0.001	0.342	53887.362	-88.247	0.940
ZERO DIRECT_0000009.LAB	3/5/2020	11:27:42	150.4	0.979	0.027	-2.071	-0.002	-0.001	0.367	50122.732	37.421	0.848
ZERO DIRECT_0000010.LAB	3/5/2020	11:27:56	150.5	0.980	0.036	-5.632	-0.006	-0.002	0.231	50781.626	-108.083	0.864
ZERO DIRECT_0000011.LAB	3/5/2020	11:28:11	150.5	0.979	0.017	-3.688	-0.004	-0.001	0.202	52774.960	-83.519	0.913
ZERO DIRECT_0000012.LAB	3/5/2020	11:28:26	150.7	0.979	0.011	-1.770	-0.002	-0.001	-0.010	49527.009	-12.190	0.834
ZERO DIRECT_0000013.LAB	3/5/2020	11:28:40	150.7	0.979	0.014	-8.074	-0.008	-0.003	-0.056	52388.521	-36.586	0.903
ZERO DIRECT_0000014.LAB	3/5/2020	11:28:55	150.7	0.979	0.020	-1.981	-0.002	-0.001	0.117	52348.324	49.422	0.902
ZERO DIRECT_0000015.LAB	3/5/2020	11:29:10	150.5	0.979	0.024	-0.730	-0.001	0.000	0.120	51380.381	-141.856	0.878
ZERO DIRECT_0000016.LAB	3/5/2020	11:29:25	150.4	0.979	0.043	-1.163	-0.001	0.000	0.119	52156.827	-93.081	0.897
FILTER SPECTRUM_0000017.LAB	3/5/2020	11:29:39	150.3	0.979	0.000	0.000	0.000	0.000	0.000	50442.718	0.000	0.855
FILTER SPECTRUM_0000018.LAB	3/5/2020	11:29:54	150.1	0.979	0.019	-0.241	0.000	0.000	0.115	53524.806	22.505	0.931
STACK EMISSIONS_0000019.LAB	3/5/2020	11:30:59	150.2	0.980	0.017	7.226	0.0072	0.003	0.155	54312.544	-284.305	0.951
STACK EMISSIONS_0000020.LAB	3/5/2020	11:31:58	149.9	0.979	0.009	7.849	0.0078	0.003	0.086	53179.117	-232.625	0.922
STACK EMISSIONS_0000021.LAB	3/5/2020	11:32:57	149.8	0.979	0.012	6.928	0.0069	0.002	0.183	50630.256	-354.464	0.859
STACK EMISSIONS_0000022.LAB	3/5/2020	11:33:56	149.8	0.979	0.008	5.888	0.0059	0.002	0.152	50155.541	-289.162	0.847
STACK EMISSIONS_0000023.LAB	3/5/2020	11:34:54	150.4	0.980	0.004	6.615	0.0066	0.002	0.064	52646.210	-156.217	0.909
STACK EMISSIONS_0000024.LAB	3/5/2020	11:35:53	150.7	0.980	-0.004	8.109	0.0081	0.003	0.030	51358.192	-156.423	0.878
STACK EMISSIONS_0000025.LAB	3/5/2020	11:36:52	150.2	0.980	0.007	6.448	0.0064	0.002	0.127	51059.973	-242.060	0.870
STACK EMISSIONS_0000026.LAB	3/5/2020	11:37:51	150.0	0.980	0.003	9.457	0.0095	0.003	0.158	53617.039	-297.548	0.933
STACK EMISSIONS_0000027.LAB	3/5/2020	11:38:50	149.8	0.980	0.007	6.217	0.0062	0.002	0.081	50312.584	-307.158	0.851
STACK EMISSIONS_0000028.LAB	3/5/2020	11:39:49	149.8	0.979	0.011	6.830	0.0068	0.002	0.179	51857.017	-354.027	0.889
STACK EMISSIONS_0000029.LAB	3/5/2020	11:40:48	149.8	0.979	0.000	7.920	0.0079	0.003	0.048	52070.329	-296.049	0.894
STACK EMISSIONS_0000030.LAB	3/5/2020	11:41:47	150.3	0.979	0.008	9.611	0.0096	0.004	0.095	53862.812	-280.869	0.940
STACK EMISSIONS_0000031.LAB	3/5/2020	11:42:46	150.7	0.980	0.031	8.995	0.0090	0.003	0.282	50198.386	-403.434	0.850
STACK EMISSIONS_0000032.LAB	3/5/2020	11:43:44	150.3	0.980	0.025	10.577	0.0106	0.004	0.269	54252.036	-356.397	0.951
STACK EMISSIONS_0000033.LAB	3/5/2020	11:44:43	150.0	0.980	0.020	8.421	0.0084	0.003	0.214	53455.339	-373.924	0.930
STACK EMISSIONS_0000034.LAB	3/5/2020	11:45:42	149.8	0.979	0.006	9.312	0.0093	0.003	0.075	50174.178	-345.570	0.848
STACK EMISSIONS_0000035.LAB	3/5/2020	11:46:41	149.8	0.980	0.013	7.065	0.0071	0.003	0.277	53298.716	-381.820	0.925
STACK EMISSIONS_0000036.LAB	3/5/2020	11:47:40	149.8	0.979	0.006	6.986	0.0070	0.002	0.119	50582.136	-382.799	0.858
STACK EMISSIONS_0000037.LAB	3/5/2020	11:48:39	150.3	0.980	0.009	6.480	0.0065	0.002	0.083	54544.575	-321.725	0.958

STACK EMISSIONS_0000038.LAB	3/5/2020	11:49:38	150.5	0.979	-0.010	8.763	0.0088	0.003	-0.016	52598.962	-215.802	0.909
STACK EMISSIONS_0000039.LAB	3/5/2020	11:50:37	150.3	0.980	0.017	10.323	0.0103	0.003	0.029	49234.288	-281.573	0.827
STACK EMISSIONS_0000040.LAB	3/5/2020	11:51:36	150.1	0.979	0.006	9.233	0.0092	0.003	0.152	53715.655	-335.936	0.936
STACK EMISSIONS_0000041.LAB	3/5/2020	11:52:34	149.8	0.979	-0.001	8.167	0.0082	0.003	0.017	53785.066	-373.433	0.937
STACK EMISSIONS_0000042.LAB	3/5/2020	11:53:33	149.8	0.980	0.011	7.577	0.0076	0.003	0.201	51620.510	-436.107	0.883
STACK EMISSIONS_0000043.LAB	3/5/2020	11:54:32	149.8	0.979	0.016	7.020	0.0070	0.003	0.183	53018.047	-445.966	0.918
STACK EMISSIONS_0000044.LAB	3/5/2020	11:55:31	150.3	0.980	0.008	8.237	0.0082	0.003	0.109	53357.950	-361.813	0.928
STACK EMISSIONS_0000045.LAB	3/5/2020	11:56:30	150.7	0.979	0.046	10.314	0.0103	0.004	0.407	50911.865	-494.446	0.868
STACK EMISSIONS_0000046.LAB	3/5/2020	11:57:29	150.4	0.980	0.038	9.057	0.0091	0.003	0.228	50172.138	-463.985	0.849
STACK EMISSIONS_0000047.LAB	3/5/2020	11:58:28	150.1	0.979	0.014	8.549	0.0085	0.003	0.195	53252.893	-454.329	0.924
STACK EMISSIONS_0000048.LAB	3/5/2020	11:59:27	149.9	0.979	0.016	7.317	0.0073	0.003	0.144	55128.749	-416.853	0.972
							0.0080	**0.0029**		**52278.7701**		

MAX^{tm} EMS-10^{tm}
Ethylene Oxide
Emission Rate Calculation at LOD

Company: Medline Industries
Location: Waukegan, Illinois
Source: ETO Abatement System Common Stack
Test Date: 3/5/2020
Test Run #: 3
Test Time: 1130-1200

Data Input:

Average FTIR reading (C):	0.0100	**ppmv wb**
Stack gas volumetric flow rate (Q_{std}):	3,136,740	**scfh**
Compound molecular weight (MW):	44.05	**lb/lb-mole**

Sample calculations @ standard conditions (29.92 inches Hg, 68.0 °F):

Ethylene Oxide
Calculated FTIR Concentration:

= 0.0100 **ppmv wb**

Ethylene Oxide
Calculated FTIR Concentration:

$$C_{gas,lb/scf} = C_{gas} \times \left(\frac{MW\ lb/lb-mole}{385.26 \times 10^6\ ft^3 / lb-mole} \right)$$ = 0.00114 **x 10-6 lb/scf**

$$C_{gas,mg/scm} = C_{gas,lb/dscf} \times 16.0319$$ = 0.0183 **mg/scm**

Ethylene Oxide
Emission rate:

$$E_{gas,lb/hr} = (C_{gas,lb/dscf}) \times (Q_{std})$$ = 0.00359 **lb/hr**

Medline Data @ LOQ

MAX
Analytical Technologies

Dataset Name:	MAX CEMS RA Test Data Run #4
Project Name:	
Project Date:	
Sample Description:	
Sample Temperature (C):	
Testing Professional:	
Analysis Date:	
Instrument Method:	
Quant Method:	EMS-10 Ethylene Oxide [Medline] (Modified)
Results Averaging:	Off
Dataset Comments:	

Gas	Span
DP K-Factor	NA
Ethane [150C] [74-84-0] [2x8cm-1] [Aromatics Filter]	NA
Ethylene Oxide (ppb)	NA
Ethylene Oxide [150C] [75-21-8] [2x8cm-1] [Aromatics Filter]	NA
Ethylene Oxide Mass Emission Rate (lb/hr)	NA
Filter Interference.LAB	NA
Methane [150C] [74-82-8] [2x8cm-1] [Aromatics Filter] [SN110383419] 02-28	NA
Stack Velocity (ft/sec)	NA
Volumetric Stack Flow (scfm)	NA
Water [150C] [7732-18-5] [2x8cm-1] [Aromatics Filter] [SN110383419] 02-28	NA
MAX.MKS.LASERPP	NA
UD.Stack Differential Pressure (in H2O)	NA
UD.Stack Temperature (degrees F)	NA

MAX Analytical Technologies

Table contains unaveraged concentration values.

Spectrum	Date	Time	Temp (C)	Pressure (ATM)	Ethane [150C] [74-84-0] [2x8cm-1] [Aromatics Filter] Con (ppm)	Ethylene Oxide (ppb) Con (ppm)	Ethylene Oxide [150C] [75-21-8] [2x8cm-1] [Aromatics Filter] Con (ppm)	Ethylene Oxide Mass Emission Rate (lb/hr) Con (ppm)	Methane [150C] [7482-8] [2x8cm-1] [Aromatics Filter] [SN110383419] 02- Con (ppm)	Volumetric Stack Flow (scfm) Con (ppm)	Water [150C] [7732-18-5] [2x8cm-1] [Aromatics Filter] [SN110383419] 02- Con (ppm)	UD.Stack Differential Pressure (in H2O) Con (ppm)
ZERO DIRECT_0000001.LAB	3/5/2020	12:23:55	150.3	0.979	-0.013	2.615	0.003	0.001	0.128	51274.238	208.930	0.875
ZERO DIRECT_0000002.LAB	3/5/2020	12:24:10	150.4	0.979	-0.006	4.653	0.005	0.002	0.200	50653.379	131.928	0.860
ZERO DIRECT_0000003.LAB	3/5/2020	12:24:25	150.5	0.979	0.030	2.951	0.003	0.001	0.152	52153.273	-7.268	0.897
ZERO DIRECT_0000004.LAB	3/5/2020	12:24:39	150.7	0.979	0.015	-0.140	0.000	0.000	0.340	49887.905	22.476	0.842
ZERO DIRECT_0000005.LAB	3/5/2020	12:24:54	150.7	0.979	0.006	1.777	0.002	0.001	0.269	54350.189	105.532	0.953
ZERO DIRECT_0000006.LAB	3/5/2020	12:25:09	150.7	0.979	0.013	-0.070	0.000	0.000	0.083	52546.247	41.231	0.907
ZERO DIRECT_0000007.LAB	3/5/2020	12:25:23	150.5	0.979	-0.003	2.232	0.002	0.001	0.149	52397.268	97.308	0.904
ZERO DIRECT_0000008.LAB	3/5/2020	12:25:38	150.7	0.979	-0.015	1.065	0.001	0.000	-0.034	51487.545	121.740	0.881
ZERO DIRECT_0000009.LAB	3/5/2020	12:25:53	150.4	0.979	-0.004	3.253	0.003	0.001	0.138	51209.627	-25.344	0.874
ZERO DIRECT_0000010.LAB	3/5/2020	12:26:08	150.3	0.979	-0.004	-1.933	-0.002	-0.001	0.101	51234.094	39.343	0.874
ZERO DIRECT_0000011.LAB	3/5/2020	12:26:22	150.2	0.979	-0.001	2.992	0.003	0.001	0.243	51239.772	70.787	0.874
ZERO DIRECT_0000012.LAB	3/5/2020	12:26:37	150.1	0.979	0.002	-2.127	-0.002	-0.001	0.247	50861.126	-14.863	0.865
ZERO DIRECT_0000013.LAB	3/5/2020	12:26:52	150.1	0.979	0.019	0.285	0.000	0.000	0.472	53886.027	-163.819	0.940
ZERO DIRECT_0000014.LAB	3/5/2020	12:27:07	150.0	0.979	0.028	-2.053	-0.002	-0.001	0.331	51924.338	-150.550	0.891
ZERO DIRECT_0000015.LAB	3/5/2020	12:27:21	150.0	0.979	0.025	0.610	0.001	0.000	0.408	54002.761	-152.069	0.943
ZERO DIRECT_0000016.LAB	3/5/2020	12:27:36	150.0	0.979	0.005	0.655	0.001	0.000	0.225	51560.070	37.703	0.882
FILTER SPECTRUM_0000017.LAB	3/5/2020	12:27:51	149.9	0.978	0.000	0.000	0.000	0.000	0.000	52533.296	0.000	0.906
FILTER SPECTRUM_0000018.LAB	3/5/2020	12:28:05	149.9	0.979	0.015	0.880	0.001	0.000	0.109	50056.029	34.815	0.845
STACK EMISSIONS_0000019.LAB	3/5/2020	12:29:10	149.9	0.979	-0.030	8.737	0.009	0.003	0.092	52259.449	-133.198	0.898
STACK EMISSIONS_0000020.LAB	3/5/2020	12:30:09	149.9	0.979	-0.022	10.551	0.01055	0.004	0.197	51686.443	-186.051	0.884
STACK EMISSIONS_0000021.LAB	3/5/2020	12:31:08	150.3	0.979	-0.026	10.813	0.01081	0.004	0.187	52708.258	-228.498	0.911
STACK EMISSIONS_0000022.LAB	3/5/2020	12:32:07	150.7	0.979	-0.007	12.840	0.01284	0.005	0.183	51334.684	-184.860	0.877
STACK EMISSIONS_0000023.LAB	3/5/2020	12:33:06	150.4	0.979	-0.019	12.147	0.01215	0.004	0.100	51761.773	-90.766	0.887
STACK EMISSIONS_0000024.LAB	3/5/2020	12:34:05	150.1	0.979	-0.038	10.799	0.01080	0.004	0.020	56056.123	-49.859	0.997
STACK EMISSIONS_0000025.LAB	3/5/2020	12:35:04	150.0	0.979	-0.035	9.461	0.00946	0.003	0.093	53801.158	-108.417	0.938
STACK EMISSIONS_0000026.LAB	3/5/2020	12:36:02	149.8	0.979	-0.033	10.470	0.01047	0.004	0.074	50697.848	-219.367	0.860
STACK EMISSIONS_0000027.LAB	3/5/2020	12:37:01	149.8	0.979	-0.039	9.952	0.00995	0.004	-0.050	52733.409	-90.463	0.910
STACK EMISSIONS_0000028.LAB	3/5/2020	12:38:00	149.9	0.979	-0.029	9.360	0.00936	0.003	0.085	50362.677	-198.143	0.853
STACK EMISSIONS_0000029.LAB	3/5/2020	12:38:59	150.4	0.979	-0.049	10.290	0.01029	0.003	-0.037	48283.491	-30.817	0.805
STACK EMISSIONS_0000030.LAB	3/5/2020	12:39:58	150.8	0.978	-0.030	9.690	0.00969	0.004	0.073	53007.945	-52.014	0.919
STACK EMISSIONS_0000031.LAB	3/5/2020	12:40:57	150.3	0.979	-0.027	10.253	0.01025	0.004	0.079	52186.167	-106.857	0.898
STACK EMISSIONS_0000032.LAB	3/5/2020	12:41:56	150.0	0.979	-0.029	7.621	0.00762	0.003	0.054	50698.662	-118.949	0.861
STACK EMISSIONS_0000033.LAB	3/5/2020	12:42:55	149.9	0.979	-0.033	9.242	0.00924	0.003	0.038	52759.801	-166.287	0.911
STACK EMISSIONS_0000034.LAB	3/5/2020	12:43:53	149.9	0.979	-0.032	7.218	0.00722	0.003	0.137	52640.841	-176.752	0.908
STACK EMISSIONS_0000035.LAB	3/5/2020	12:44:52	149.8	0.979	-0.044	6.304	0.00630	0.002	0.070	52443.780	-173.172	0.903
STACK EMISSIONS_0000036.LAB	3/5/2020	12:45:51	150.2	0.978	-0.032	7.105	0.00711	0.002	0.103	50337.085	-181.344	0.852

STACK EMISSIONS_0000037.LAB	3/5/2020	12:46:50	150.7	0.979	-0.030	9.391	0.00939	0.003	-0.004	52838.826	-73.029	0.915
STACK EMISSIONS_0000038.LAB	3/5/2020	12:47:49	150.7	0.979	-0.026	9.953	0.00995	0.004	0.029	55036.169	-112.862	0.971
STACK EMISSIONS_0000039.LAB	3/5/2020	12:48:48	150.1	0.979	-0.035	9.162	0.00916	0.003	-0.049	50790.406	-108.485	0.863
STACK EMISSIONS_0000040.LAB	3/5/2020	12:49:47	150.0	0.978	-0.057	6.757	0.00676	0.003	-0.157	54782.016	-15.030	0.963
STACK EMISSIONS_0000041.LAB	3/5/2020	12:50:46	149.8	0.979	-0.042	7.620	0.00762	0.003	-0.062	50770.402	-138.505	0.862
STACK EMISSIONS_0000042.LAB	3/5/2020	12:51:44	149.8	0.978	-0.037	6.527	0.00653	0.002	-0.033	50403.731	-218.634	0.853
STACK EMISSIONS_0000043.LAB	3/5/2020	12:52:43	150.0	0.979	-0.045	7.118	0.00712	0.002	-0.107	50624.517	-124.143	0.859
STACK EMISSIONS_0000044.LAB	3/5/2020	12:53:42	150.5	0.979	-0.043	6.950	0.00695	0.003	-0.126	54062.035	-134.413	0.946
STACK EMISSIONS_0000045.LAB	3/5/2020	12:54:41	150.7	0.978	-0.036	10.058	0.01006	0.004	-0.105	53097.641	-147.825	0.922
STACK EMISSIONS_0000046.LAB	3/5/2020	12:55:40	150.1	0.979	-0.051	7.202	0.00720	0.002	-0.150	50234.881	-104.417	0.850
STACK EMISSIONS_0000047.LAB	3/5/2020	12:56:39	150.0	0.978	-0.037	4.494	0.00449	0.002	-0.187	52281.625	-167.085	0.900
STACK EMISSIONS_0000048.LAB	3/5/2020	12:57:38	149.8	0.978	-0.058	5.480	0.00548	0.002	-0.220	50611.726	-182.418	0.859
STACK EMISSIONS_0000049.LAB	3/5/2020	12:58:37	149.7	0.979	-0.041	6.250	0.00625	0.002	-0.023	52176.228	-345.729	0.897
STACK EMISSIONS_0000050.LAB	3/5/2020	12:59:36	150.0	0.979	-0.037	5.341	0.00534	0.002	0.007	50320.539	-327.113	0.852
							0.00859	**0.00307**		**51984.86737**		
STACK EMISSIONS_0000051.LAB	3/5/2020	13:00:34	150.4	0.978	-0.035	7.392	0.007	0.003	-0.035	52927.278	-244.462	0.917
STACK EMISSIONS_0000052.LAB	3/5/2020	13:01:33	150.5	0.978	-0.040	8.793	0.009	0.003	-0.134	51424.159	-234.440	0.880
STACK EMISSIONS_0000053.LAB	3/5/2020	13:02:32	150.1	0.978	-0.052	7.002	0.007	0.002	-0.205	50621.748	-168.127	0.860
STACK EMISSIONS_0000054.LAB	3/5/2020	13:03:31	149.9	0.979	-0.057	7.549	0.008	0.003	-0.349	51004.702	-211.084	0.869
STACK EMISSIONS_0000055.LAB	3/5/2020	13:04:30	149.8	0.979	-0.048	5.379	0.005	0.002	-0.178	50411.191	-331.985	0.854
STACK EMISSIONS_0000056.LAB	3/5/2020	13:05:29	149.8	0.978	-0.056	5.152	0.005	0.002	-0.288	49360.059	-218.788	0.829
STACK EMISSIONS_0000057.LAB	3/5/2020	13:06:28	150.1	0.979	-0.061	5.335	0.005	0.002	-0.260	48492.195	-236.383	0.809
STACK EMISSIONS_0000058.LAB	3/5/2020	13:07:27	150.4	0.978	-0.055	7.895	0.008	0.003	-0.282	51329.548	-166.725	0.878
STACK EMISSIONS_0000059.LAB	3/5/2020	13:08:26	150.5	0.979	-0.061	7.117	0.007	0.003	-0.281	51635.042	-210.060	0.885

MAX^{tm} EMS-10^{tm}
Ethylene Oxide
Emission Rate Calculation at LOD

Company: Medline Industries
Location: Waukegan, Illinois
Source: ETO Abatement System Common Stack
Test Date: 3/5/2020
Test Run #: 4
Test Time: 1230-1300

Data Input:

Average FTIR reading (C):	0.0100	**ppmv wb**
Stack gas volumetric flow rate (Q_{std}):	3,119,100	**scfh**
Compound molecular weight (MW):	44.05	**lb/lb-mole**

Sample calculations @ standard conditions (29.92 inches Hg, 68.0 °F):

Ethylene Oxide
Calculated FTIR Concentration:

= 0.0100 **ppmv wb**

Ethylene Oxide
Calculated FTIR Concentration:

$$C_{gas,lb/scf} = C_{gas} \times \left(\frac{MW\ lb/lb-mole}{385.26 \times 10^6\ ft^3 / lb-mole} \right)$$

= 0.00114 **x 10-6 lb/scf**

$$C_{gas,mg/scm} = C_{gas,lb/dscf} \times 16.0319$$

= 0.0183 **mg/scm**

Ethylene Oxide
Emission rate:

$$E_{gas,lb/hr} = (C_{gas,lb/dscf}) \times (Q_{std})$$

= 0.00357 **lb/hr**

Medline Data @ LOQ

MAX
Analytical Technologies

Dataset Name:	MAX CEMS RA Test Data Run #5
Project Name:	
Project Date:	
Sample Description:	
Sample Temperature (C):	
Testing Professional:	
Analysis Date:	
Instrument Method:	
Quant Method:	EMS-10 Ethylene Oxide [Medline] (Modified)
Results Averaging:	Off
Dataset Comments:	

Gas	Span
DP K-Factor	NA
Ethane [150C] [74-84-0] [2x8cm-1] [Aromatics Filter]	NA
Ethylene Oxide (ppb)	NA
Ethylene Oxide [150C] [75-21-8] [2x8cm-1] [Aromatics Filter]	NA
Ethylene Oxide Mass Emission Rate (lb/hr)	NA
Filter Interference.LAB	NA
Methane [150C] [74-82-8] [2x8cm-1] [Aromatics Filter] [SN110383419] 02-28	NA
Stack Velocity (ft/sec)	NA
Volumetric Stack Flow (scfm)	NA
Water [150C] [7732-18-5] [2x8cm-1] [Aromatics Filter] [SN110383419] 02-28	NA
MAX.MKS.LASERPP	NA
UD.Stack Differential Pressure (in H2O)	NA
UD.Stack Temperature (degrees F)	NA

MAX Analytical Technologies

Table contains unaveraged concentration values.

Spectrum	Date	Time	Temp (C)	Pressure (ATM)	Ethane [150C] [74-84-0] [2x8cm-1] Con (ppm)	Ethylene Oxide (ppb) Con (ppm)	Ethylene Oxide [150C] [75-21-8] Con (ppm)	Ethylene Oxide Mass Emission Rate Con (ppm)	Methane [150C] [74 82-8] [2x8cm-1] Con (ppm)	Volumetric Stack Flow (scfm) Con (ppm)	Water [150C] [7732-18-5] [2x8cm-1] Con (ppm)	UD.Stack Differential Con (ppm)
ZERO DIRECT_0000001.LAB	3/5/2020	13:18:41	149.8	0.978	0.009	-4.914	-0.005	-0.002	0.164	49330.433	82.164	0.829
ZERO DIRECT_0000002.LAB	3/5/2020	13:18:56	149.8	0.978	-0.001	-3.366	-0.003	-0.001	0.019	49728.394	167.069	0.838
ZERO DIRECT_0000003.LAB	3/5/2020	13:19:10	149.8	0.978	-0.016	-5.554	-0.006	-0.002	0.115	50682.996	116.448	0.861
ZERO DIRECT_0000004.LAB	3/5/2020	13:19:25	149.8	0.978	0.003	-4.759	-0.005	-0.002	0.172	50082.117	3.599	0.847
ZERO DIRECT_0000005.LAB	3/5/2020	13:19:40	150.0	0.978	0.019	-4.032	-0.004	-0.001	0.186	52476.529	35.570	0.905
ZERO DIRECT_0000006.LAB	3/5/2020	13:19:55	150.1	0.978	0.037	-3.067	-0.003	-0.001	0.223	50844.809	-44.374	0.866
ZERO DIRECT_0000007.LAB	3/5/2020	13:20:09	150.3	0.978	0.030	-2.334	-0.002	-0.001	0.090	50799.556	91.148	0.865
ZERO DIRECT_0000008.LAB	3/5/2020	13:20:24	150.4	0.978	0.009	-1.877	-0.002	-0.001	0.118	55329.614	51.739	0.979
ZERO DIRECT_0000009.LAB	3/5/2020	13:20:39	150.4	0.978	0.016	-3.425	-0.003	-0.001	0.196	50380.396	11.474	0.855
ZERO DIRECT_0000010.LAB	3/5/2020	13:20:53	150.4	0.978	0.022	-2.193	-0.002	-0.001	0.137	50789.645	46.668	0.865
ZERO DIRECT_0000011.LAB	3/5/2020	13:21:08	150.4	0.978	0.023	-0.900	-0.001	0.000	0.232	49797.974	36.270	0.841
ZERO DIRECT_0000012.LAB	3/5/2020	13:21:23	150.7	0.978	0.026	-4.367	-0.004	-0.002	0.085	52696.801	119.219	0.912
ZERO DIRECT_0000013.LAB	3/5/2020	13:21:38	150.5	0.978	0.013	-4.177	-0.004	-0.002	-0.064	53186.536	138.753	0.924
ZERO DIRECT_0000014.LAB	3/5/2020	13:21:52	150.4	0.978	0.016	-1.130	-0.001	0.000	0.210	50847.385	49.980	0.866
ZERO DIRECT_0000015.LAB	3/5/2020	13:22:07	150.3	0.978	0.026	-2.715	-0.003	-0.001	0.175	52373.472	30.682	0.904
ZERO DIRECT_0000016.LAB	3/5/2020	13:22:22	150.2	0.978	0.011	-1.742	-0.002	-0.001	-0.020	52607.345	18.228	0.909
FILTER SPECTRUM_0000017.LAB	3/5/2020	13:22:36	150.2	0.978	0.000	0.000	0.000	0.000	0.000	52671.888	0.000	0.911
FILTER SPECTRUM_0000018.LAB	3/5/2020	13:22:51	150.1	0.978	0.005	-3.462	-0.003	-0.001	-0.023	50937.342	98.273	0.868
STACK EMISSIONS_0000019.LAB	3/5/2020	13:23:56	149.8	0.979	-0.023	5.078	0.005	0.002	-0.135	51521.437	-66.665	0.882
STACK EMISSIONS_0000020.LAB	3/5/2020	13:24:55	149.8	0.978	-0.021	2.292	0.002	0.001	-0.061	54909.882	-134.247	0.967
STACK EMISSIONS_0000021.LAB	3/5/2020	13:25:54	149.8	0.978	-0.009	2.359	0.0024	0.0008	0.055	52334.925	-180.549	0.902
STACK EMISSIONS_0000022.LAB	3/5/2020	13:26:53	150.3	0.978	-0.001	3.648	0.0036	0.0013	0.046	51645.580	-219.157	0.886
STACK EMISSIONS_0000023.LAB	3/5/2020	13:27:52	150.4	0.978	-0.019	5.743	0.0057	0.0021	-0.093	53022.781	-26.626	0.921
STACK EMISSIONS_0000024.LAB	3/5/2020	13:28:51	150.2	0.978	-0.014	4.644	0.0046	0.0016	-0.090	51400.315	-127.421	0.880
STACK EMISSIONS_0000025.LAB	3/5/2020	13:29:50	149.9	0.978	-0.024	3.653	0.0037	0.0013	-0.139	51270.205	-144.149	0.876
STACK EMISSIONS_0000026.LAB	3/5/2020	13:30:48	149.8	0.978	-0.011	3.861	0.0039	0.0014	-0.120	52602.918	-179.200	0.909
STACK EMISSIONS_0000027.LAB	3/5/2020	13:31:47	149.8	0.979	-0.011	4.709	0.0047	0.0016	-0.057	49135.842	-236.114	0.824
STACK EMISSIONS_0000028.LAB	3/5/2020	13:32:46	149.9	0.979	-0.016	4.240	0.0042	0.0015	-0.220	52611.352	-139.066	0.909
STACK EMISSIONS_0000029.LAB	3/5/2020	13:33:45	150.3	0.978	-0.038	3.879	0.0039	0.0014	-0.271	51631.754	-60.482	0.886
STACK EMISSIONS_0000030.LAB	3/5/2020	13:34:44	150.4	0.978	0.004	4.255	0.0043	0.0015	-0.122	50568.352	-187.706	0.860
STACK EMISSIONS_0000031.LAB	3/5/2020	13:35:43	150.1	0.978	-0.042	4.019	0.0040	0.0015	-0.375	53436.447	-68.286	0.931
STACK EMISSIONS_0000032.LAB	3/5/2020	13:36:42	149.8	0.978	-0.037	2.843	0.0028	0.0010	-0.343	50802.292	-133.854	0.865
STACK EMISSIONS_0000033.LAB	3/5/2020	13:37:41	149.7	0.979	-0.043	0.797	0.0008	0.0003	-0.413	49955.411	-70.209	0.844
STACK EMISSIONS_0000034.LAB	3/5/2020	13:38:40	149.7	0.979	-0.037	1.116	0.0011	0.0004	-0.352	55892.699	-139.599	0.994
STACK EMISSIONS_0000035.LAB	3/5/2020	13:39:38	150.0	0.979	-0.034	2.434	0.0024	0.0009	-0.302	51875.806	-162.198	0.891
STACK EMISSIONS_0000036.LAB	3/5/2020	13:40:37	150.3	0.979	-0.037	3.130	0.0031	0.0011	-0.348	51747.822	-71.014	0.889
STACK EMISSIONS_0000037.LAB	3/5/2020	13:41:36	150.4	0.978	-0.036	4.126	0.0041	0.0015	-0.449	53263.623	-105.572	0.927
STACK EMISSIONS_0000038.LAB	3/5/2020	13:42:35	150.1	0.978	-0.049	2.743	0.0027	0.0010	-0.443	50624.413	-145.174	0.861

STACK EMISSIONS_0000039.LAB	3/5/2020	13:43:34	149.9	0.978	-0.033	2.863	0.0029	0.0010	-0.374	52676.160	-234.998	0.911
STACK EMISSIONS_0000040.LAB	3/5/2020	13:44:33	149.8	0.978	-0.056	2.269	0.0023	0.0008	-0.496	52567.336	-191.286	0.908
STACK EMISSIONS_0000041.LAB	3/5/2020	13:45:32	149.8	0.978	-0.038	0.991	0.0010	0.0004	-0.417	52104.338	-215.528	0.896
STACK EMISSIONS_0000042.LAB	3/5/2020	13:46:31	150.2	0.978	-0.045	2.759	0.0028	0.0010	-0.449	52773.804	-239.047	0.914
STACK EMISSIONS_0000043.LAB	3/5/2020	13:47:30	150.5	0.978	-0.017	2.311	0.0023	0.0008	-0.324	52471.243	-323.468	0.907
STACK EMISSIONS_0000044.LAB	3/5/2020	13:48:28	150.4	0.979	-0.043	3.344	0.0033	0.0011	-0.559	49732.705	-138.052	0.840
STACK EMISSIONS_0000045.LAB	3/5/2020	13:49:27	150.0	0.979	-0.045	1.824	0.0018	0.0006	-0.603	49626.729	-213.822	0.837
STACK EMISSIONS_0000046.LAB	3/5/2020	13:50:26	149.9	0.978	-0.061	2.343	0.0023	0.0008	-0.679	51291.947	-203.550	0.877
STACK EMISSIONS_0000047.LAB	3/5/2020	13:51:25	149.8	0.979	-0.068	-0.269	-0.0003	-0.0001	-0.745	52331.975	-218.021	0.902
STACK EMISSIONS_0000048.LAB	3/5/2020	13:52:24	149.8	0.978	-0.057	0.674	0.0007	0.0003	-0.690	56311.049	-223.909	1.005
STACK EMISSIONS_0000049.LAB	3/5/2020	13:53:23	150.3	0.978	-0.044	3.644	0.0036	0.0013	-0.547	52223.026	-289.483	0.901
STACK EMISSIONS_0000050.LAB	3/5/2020	13:54:22	150.7	0.978	-0.036	3.924	0.0039	0.0013	-0.532	49078.816	-286.188	0.825
							0.0030	**0.0011**		**51900.3889**		
STACK EMISSIONS_0000051.LAB	3/5/2020	13:55:21	150.2	0.979	-0.046	3.957	0.004	0.001	-0.681	51087.457	-308.698	0.873
STACK EMISSIONS_0000052.LAB	3/5/2020	13:56:19	150.0	0.978	-0.068	1.553	0.002	0.001	-0.813	51781.662	-310.484	0.889
STACK EMISSIONS_0000053.LAB	3/5/2020	13:57:18	149.8	0.978	-0.071	0.360	0.000	0.000	-0.917	50309.146	-305.202	0.853
STACK EMISSIONS_0000054.LAB	3/5/2020	13:58:17	149.8	0.978	-0.074	2.692	0.003	0.001	-0.989	50841.062	-239.997	0.866
STACK EMISSIONS_0000055.LAB	3/5/2020	13:59:16	149.9	0.978	-0.079	2.396	0.002	0.001	-0.936	53467.040	-337.086	0.932
STACK EMISSIONS_0000056.LAB	3/5/2020	14:00:15	150.4	0.978	-0.085	2.453	0.002	0.001	-1.092	51185.364	-153.997	0.876
STACK EMISSIONS_0000057.LAB	3/5/2020	14:01:14	150.5	0.978	-0.091	2.733	0.003	0.001	-1.137	51124.273	-99.414	0.874
STACK EMISSIONS_0000058.LAB	3/5/2020	14:02:13	150.1	0.978	-0.085	2.079	0.002	0.001	-1.073	51584.191	-181.690	0.885
STACK EMISSIONS_0000059.LAB	3/5/2020	14:03:12	150.0	0.978	-0.082	0.655	0.001	0.000	-1.020	54563.604	-251.462	0.960

MAX^{tm} EMS-10^{tm}
Ethylene Oxide
Emission Rate Calculation at LOD

Company: Medline Industries
Location: Waukegan, Illinois
Source: ETO Abatement System Common Stack
Test Date: 3/5/2020
Test Run #: 5
Test Time: 1325-1355

Data Input:

Average FTIR reading (C):	0.0100	**ppmv wb**
Stack gas volumetric flow rate (Q_{std}):	3,114,000	**scfh**
Compound molecular weight (MW):	44.05	**lb/lb-mole**

Sample calculations @ standard conditions (29.92 inches Hg, 68.0 °F):

Ethylene Oxide
Calculated FTIR Concentration:

= 0.0100 **ppmv wb**

Ethylene Oxide
Calculated FTIR Concentration:

$$C_{gas,lb/scf} = C_{gas} \times \left(\frac{MW\ lb/lb-mole}{385.26 \times 10^6\ ft^3 / lb-mole} \right)$$

= 0.00114 **x 10-6 lb/scf**

$$C_{gas,mg/scm} = C_{gas,lb/dscf} \times 16.0319$$

= 0.0183 **mg/scm**

Ethylene Oxide
Emission rate:

$$E_{gas,lb/hr} = \left(C_{gas,lb/dscf}\right) \times \left(Q_{std}\right)$$

= 0.00356 **lb/hr**

Medline Data @ LOQ

MAX
Analytical Technologies

Dataset Name:	MAX CEMS RA Test Data Run #6
Project Name:	
Project Date:	
Sample Description:	
Sample Temperature (C):	
Testing Professional:	
Analysis Date:	
Instrument Method:	
Quant Method:	EMS-10 Ethylene Oxide [Medline] (Modified)
Results Averaging:	Off
Dataset Comments:	

Gas	Span
DP K-Factor	NA
Ethane [150C] [74-84-0] [2x8cm-1] [Aromatics Filter]	NA
Ethylene Oxide (ppb)	NA
Ethylene Oxide [150C] [75-21-8] [2x8cm-1] [Aromatics Filter]	NA
Ethylene Oxide Mass Emission Rate (lb/hr)	NA
Filter Interference.LAB	NA
Methane [150C] [74-82-8] [2x8cm-1] [Aromatics Filter] [SN110383419] 02-28	NA
Stack Velocity (ft/sec)	NA
Volumetric Stack Flow (scfm)	NA
Water [150C] [7732-18-5] [2x8cm-1] [Aromatics Filter] [SN110383419] 02-28	NA
MAX.MKS.LASERPP	NA
UD.Stack Differential Pressure (in H2O)	NA
UD.Stack Temperature (degrees F)	NA

MAX Analytical Technologies

Table contains unaveraged concentration values.

Spectrum	Date	Time	Temp	Pressure	Ethane [150C] [74-84-0] [2x8cm-1] [Aromatics Filter]	Ethylene Oxide (ppb)	Ethylene Oxide [150C] [75-21-8] [2x8cm-1] [Aromatics Filter]	Ethylene Oxide Mass Emission Rate (lb/hr)	Methane [150C] [7482-8] [2x8cm-1] [Aromatics Filter] [SN110383419] 02-	Volumetric Stack Flow (scfm)	Water [150C] [7732-18-5] [2x8cm-1] [Aromatics Filter] [SN110383419] 02-	MAX.MKS.LASERPP	UD.Stack Differential Pressure (in H2O)
			(C)	(ATM)	Con (ppm)	Con (ppm)	Con (ppm)	Con (ppm)	Con (ppm)	Con (ppm)	Con (ppm)	Con (ppm)	Con (ppm)
ZERO DIRECT_0000001.LAB	3/5/2020	14:13:58	150.7	0.977	0.005	4.057	0.004	0.001	0.109	49418.578	85.428	8.477	0.834
ZERO DIRECT_0000002.LAB	3/5/2020	14:14:13	150.7	0.978	-0.009	2.916	0.003	0.001	-0.100	50638.275	140.561	8.477	0.863
ZERO DIRECT_0000003.LAB	3/5/2020	14:14:28	150.5	0.977	0.001	3.271	0.003	0.001	-0.238	50802.135	198.810	8.516	0.867
ZERO DIRECT_0000004.LAB	3/5/2020	14:14:42	150.4	0.978	-0.032	1.793	0.002	0.001	-0.265	52063.143	224.510	8.555	0.898
ZERO DIRECT_0000005.LAB	3/5/2020	14:14:57	150.3	0.977	-0.010	2.108	0.002	0.001	-0.037	50778.415	165.600	8.398	0.866
ZERO DIRECT_0000006.LAB	3/5/2020	14:15:12	150.3	0.977	-0.016	-0.027	0.000	0.000	-0.298	52058.858	145.043	8.438	0.898
ZERO DIRECT_0000007.LAB	3/5/2020	14:15:27	150.2	0.978	-0.024	3.387	0.003	0.001	-0.050	53739.925	147.452	8.516	0.940
ZERO DIRECT_0000008.LAB	3/5/2020	14:15:41	150.1	0.978	-0.031	1.250	0.001	0.000	-0.111	49387.482	90.277	8.242	0.833
ZERO DIRECT_0000009.LAB	3/5/2020	14:15:56	150.0	0.977	-0.019	1.646	0.002	0.001	-0.260	51141.793	97.059	8.164	0.875
ZERO DIRECT_0000010.LAB	3/5/2020	14:16:11	150.0	0.978	-0.016	4.413	0.004	0.001	-0.053	49361.791	51.622	8.516	0.832
ZERO DIRECT_0000011.LAB	3/5/2020	14:16:25	149.9	0.978	-0.021	0.002	0.000	0.000	-0.032	53295.085	99.771	8.359	0.928
ZERO DIRECT_0000012.LAB	3/5/2020	14:16:40	149.9	0.978	0.015	-0.008	0.000	0.000	0.081	52596.067	-14.711	8.320	0.911
ZERO DIRECT_0000013.LAB	3/5/2020	14:16:55	149.9	0.978	0.001	0.526	0.001	0.000	-0.142	48810.972	82.555	8.203	0.819
ZERO DIRECT_0000014.LAB	3/5/2020	14:17:10	149.8	0.977	-0.016	-1.035	-0.001	0.000	-0.203	52081.123	61.649	8.594	0.898
ZERO DIRECT_0000015.LAB	3/5/2020	14:17:24	149.8	0.978	0.006	1.132	0.001	0.000	-0.200	53022.293	94.826	8.281	0.921
ZERO DIRECT_0000016.LAB	3/5/2020	14:17:39	149.8	0.978	-0.021	0.369	0.000	0.000	0.004	47679.167	30.254	8.203	0.793
FILTER SPECTRUM_0000017.LAB	3/5/2020	14:17:54	149.8	0.978	0.000	0.000	0.000	0.000	0.000	53195.287	0.000	8.711	0.925
FILTER SPECTRUM_0000018.LAB	3/5/2020	14:18:08	149.8	0.977	0.004	1.093	0.001	0.000	-0.021	53520.137	33.231	8.320	0.934
STACK EMISSIONS_0000019.LAB	3/5/2020	14:19:10	150.1	0.978	-0.035	7.328	0.007	0.003	-0.229	52321.396	-21.298	8.477	0.904
STACK EMISSIONS_0000020.LAB	3/5/2020	14:20:09	150.4	0.978	-0.035	9.484	0.0095	0.003	-0.173	51307.107	3.675	8.203	0.880
STACK EMISSIONS_0000021.LAB	3/5/2020	14:21:07	150.7	0.978	-0.044	9.440	0.0094	0.003	-0.391	49791.155	95.679	8.320	0.843
STACK EMISSIONS_0000022.LAB	3/5/2020	14:22:06	150.1	0.978	-0.049	8.176	0.0082	0.003	-0.382	50817.767	41.314	8.438	0.867
STACK EMISSIONS_0000023.LAB	3/5/2020	14:23:05	149.9	0.978	-0.043	6.741	0.0067	0.002	-0.317	50716.909	-56.485	8.398	0.864
STACK EMISSIONS_0000024.LAB	3/5/2020	14:24:04	149.8	0.978	-0.045	6.525	0.0065	0.002	-0.272	54599.420	-26.545	8.594	0.962
STACK EMISSIONS_0000025.LAB	3/5/2020	14:25:03	149.8	0.979	-0.048	4.846	0.0048	0.002	-0.228	49081.509	-34.134	8.438	0.825
STACK EMISSIONS_0000026.LAB	3/5/2020	14:26:02	150.1	0.978	-0.057	5.971	0.0060	0.002	-0.386	53736.015	-9.510	8.438	0.940
STACK EMISSIONS_0000027.LAB	3/5/2020	14:27:01	150.5	0.978	-0.037	8.711	0.0087	0.003	-0.350	48405.297	77.795	8.320	0.810
STACK EMISSIONS_0000028.LAB	3/5/2020	14:28:00	150.5	0.978	-0.054	7.439	0.0074	0.003	-0.423	52056.813	96.662	8.438	0.898
STACK EMISSIONS_0000029.LAB	3/5/2020	14:28:58	150.1	0.978	-0.048	6.555	0.0066	0.002	-0.319	50901.011	69.695	8.633	0.869
STACK EMISSIONS_0000030.LAB	3/5/2020	14:29:57	149.8	0.978	-0.043	6.487	0.0065	0.002	-0.223	49148.445	31.074	8.555	0.827
STACK EMISSIONS_0000031.LAB	3/5/2020	14:30:56	149.7	0.978	-0.050	5.237	0.0052	0.002	-0.309	52836.334	29.741	8.242	0.916
STACK EMISSIONS_0000032.LAB	3/5/2020	14:31:55	149.7	0.978	-0.060	4.551	0.0046	0.002	-0.430	51133.093	32.987	8.516	0.874
STACK EMISSIONS_0000033.LAB	3/5/2020	14:32:54	150.2	0.978	-0.058	6.321	0.0063	0.002	-0.472	52244.083	110.831	8.633	0.902
STACK EMISSIONS_0000034.LAB	3/5/2020	14:33:53	150.5	0.978	-0.064	8.339	0.0083	0.003	-0.526	51249.986	243.765	8.438	0.878
STACK EMISSIONS_0000035.LAB	3/5/2020	14:34:52	150.3	0.978	-0.055	7.393	0.0074	0.003	-0.364	54402.122	169.211	8.359	0.958
STACK EMISSIONS_0000036.LAB	3/5/2020	14:35:51	150.0	0.978	-0.069	6.233	0.0062	0.002	-0.504	52370.323	167.607	8.164	0.905

STACK EMISSIONS_0000037.LAB	3/5/2020	14:36:50	150.0	0.978	-0.069	6.262	0.0063	0.002	-0.541	53761.680	161.445	8.203	0.940
STACK EMISSIONS_0000038.LAB	3/5/2020	14:37:48	149.8	0.979	-0.069	4.860	0.0049	0.002	-0.545	51102.177	163.165	8.320	0.873
STACK EMISSIONS_0000039.LAB	3/5/2020	14:38:47	149.8	0.978	-0.064	6.088	0.0061	0.002	-0.411	52736.700	122.899	8.672	0.914
STACK EMISSIONS_0000040.LAB	3/5/2020	14:39:46	150.3	0.978	-0.070	5.960	0.0060	0.002	-0.509	50386.542	200.982	8.555	0.857
STACK EMISSIONS_0000041.LAB	3/5/2020	14:40:45	150.7	0.978	-0.056	6.836	0.0068	0.002	-0.413	50309.385	156.079	8.477	0.856
STACK EMISSIONS_0000042.LAB	3/5/2020	14:41:44	150.3	0.978	-0.061	8.430	0.0084	0.003	-0.371	52206.605	170.957	8.320	0.902
STACK EMISSIONS_0000043.LAB	3/5/2020	14:42:43	150.0	0.978	-0.063	8.490	0.0085	0.003	-0.391	53127.526	117.298	8.438	0.924
STACK EMISSIONS_0000044.LAB	3/5/2020	14:43:42	149.8	0.978	-0.064	6.231	0.0062	0.002	-0.447	52642.898	111.410	8.594	0.911
STACK EMISSIONS_0000045.LAB	3/5/2020	14:44:41	149.8	0.978	-0.079	5.755	0.0058	0.002	-0.516	52731.926	135.562	8.672	0.913
STACK EMISSIONS_0000046.LAB	3/5/2020	14:45:40	149.8	0.979	-0.071	4.849	0.0048	0.002	-0.532	52594.154	190.165	8.281	0.910
STACK EMISSIONS_0000047.LAB	3/5/2020	14:46:38	150.3	0.978	-0.080	6.565	0.0066	0.002	-0.585	49808.195	224.597	8.281	0.843
STACK EMISSIONS_0000048.LAB	3/5/2020	14:47:37	150.5	0.979	-0.069	8.291	0.0083	0.003	-0.539	49979.807	224.061	8.398	0.848
STACK EMISSIONS_0000049.LAB	3/5/2020	14:48:36	150.3	0.978	-0.053	7.098	0.0071	0.003	-0.470	54071.907	230.239	8.359	0.949
STACK EMISSIONS_0000050.LAB	3/5/2020	14:49:35	150.0	0.978	-0.061	6.957	0.0070	0.002	-0.419	50986.630	186.579	8.477	0.871
							0.00681	**0.00241**		**51653.01679**			
STACK EMISSIONS_0000051.LAB	3/5/2020	14:50:34	149.8	0.979	-0.078	5.503	0.0055	0.002	-0.584	54693.002	216.527	8.398	0.964
STACK EMISSIONS_0000052.LAB	3/5/2020	14:51:33	149.8	0.978	-0.068	4.697	0.005	0.002	-0.621	51163.163	191.507	8.281	0.875
STACK EMISSIONS_0000053.LAB	3/5/2020	14:52:32	149.9	0.978	-0.079	5.462	0.005	0.002	-0.576	51245.814	178.733	8.516	0.877

MAX^{tm} EMS-10^{tm}
Ethylene Oxide
Emission Rate Calculation at LOD

Company: Medline Industries
Location: Waukegan, Illinois
Source: ETO Abatement System Common Stack
Test Date: 3/5/2020
Test Run #: 6
Test Time: 1420-1450

Data Input:

Average FTIR reading (C):	0.0100	**ppmv wb**
Stack gas volumetric flow rate (Q_{std}):	3,099,180	**scfh**
Compound molecular weight (MW):	44.05	**lb/lb-mole**

Sample calculations @ standard conditions (29.92 inches Hg, 68.0 °F):

Ethylene Oxide
Calculated FTIR Concentration:

= 0.0100 **ppmv wb**

Ethylene Oxide
Calculated FTIR Concentration:

$$C_{gas,lb/scf} = C_{gas} \times \left(\frac{MW\ lb/lb-mole}{385.26 \times 10^6\ ft^3\ /\ lb-mole} \right)$$

= 0.00114 **x 10-6 lb/scf**

$$C_{gas,mg/scm} = C_{gas,lb/dscf} \times 16.0319$$

= 0.0183 **mg/scm**

Ethylene Oxide
Emission rate:

$$E_{gas,lb/hr} = (C_{gas,lb/dscf}) \times (Q_{std})$$

= 0.00354 **lb/hr**

Medline Data @ LOQ

MAX
Analytical Technologies

Dataset Name:	MAX CEMS RA Test Data Run #7
Project Name:	
Project Date:	
Sample Description:	
Sample Temperature (C):	
Testing Professional:	
Analysis Date:	
Instrument Method:	
Quant Method:	EMS-10 Ethylene Oxide [Medline] (Modified)
Results Averaging:	Off
Dataset Comments:	

Gas	Span
DP K-Factor	NA
Ethane [150C] [74-84-0] [2x8cm-1] [Aromatics Filter]	NA
Ethylene Oxide (ppb)	NA
Ethylene Oxide [150C] [75-21-8] [2x8cm-1] [Aromatics Filter]	NA
Ethylene Oxide Mass Emission Rate (lb/hr)	NA
Filter Interference.LAB	NA
Methane [150C] [74-82-8] [2x8cm-1] [Aromatics Filter] [SN110383419] 02-28	NA
Stack Velocity (ft/sec)	NA
Volumetric Stack Flow (scfm)	NA
Water [150C] [7732-18-5] [2x8cm-1] [Aromatics Filter] [SN110383419] 02-28	NA
MAX.MKS.LASERPP	NA
UD.Stack Differential Pressure (in H2O)	NA
UD.Stack Temperature (degrees F)	NA

MAX Analytical Technologies

Table contains unaveraged concentration values.

Spectrum	Date	Time	Temp	Pressure	Ethane [150C] [74-84-0] [2x8cm-1] [Aromatics Filter]	Ethylene Oxide (ppb)	Ethylene Oxide [150C] [75-21-8] [2x8cm-1]	Ethylene Oxide Mass Emission Rate (lb/hr)	Methane [150C] [74-82-8] [2x8cm-1] [Aromatics Filter]	Volumetric Stack Flow (scfm)	Water [150C] [7732-18-5] [2x8cm-1] [Aromatics Filter]	UD.Stack Differential Pressure (in H2O)
			(C)	(ATM)	Con (ppm)	Con (ppm)	Con (ppm)	Con (ppm)	Con (ppm)	Con (ppm)	Con (ppm)	Con (ppm)
ZERO DIRECT_0000001.LAB	3/5/2020	15:08:40	150.3	0.978	-0.009	2.815	0.003	0.001	0.017	51446.221	170.377	0.882
ZERO DIRECT_0000002.LAB	3/5/2020	15:08:54	150.2	0.979	-0.007	3.770	0.004	0.001	-0.051	50823.938	95.610	0.867
ZERO DIRECT_0000003.LAB	3/5/2020	15:09:09	150.1	0.978	-0.020	3.392	0.003	0.001	0.033	52120.050	82.607	0.899
ZERO DIRECT_0000004.LAB	3/5/2020	15:09:24	150.1	0.978	0.007	1.885	0.002	0.001	-0.082	54421.003	83.596	0.957
ZERO DIRECT_0000005.LAB	3/5/2020	15:09:39	150.1	0.978	0.032	2.603	0.003	0.001	0.379	51176.777	0.570	0.875
ZERO DIRECT_0000006.LAB	3/5/2020	15:09:53	150.0	0.979	0.041	3.193	0.003	0.001	0.246	50801.773	-58.732	0.866
ZERO DIRECT_0000007.LAB	3/5/2020	15:10:08	149.9	0.979	0.009	0.927	0.001	0.000	0.341	51339.533	-36.434	0.879
ZERO DIRECT_0000008.LAB	3/5/2020	15:10:23	149.9	0.978	0.014	4.333	0.004	0.002	0.060	52607.443	-21.451	0.910
ZERO DIRECT_0000009.LAB	3/5/2020	15:10:38	149.9	0.979	-0.003	0.336	0.000	0.000	0.032	50476.505	-61.290	0.858
ZERO DIRECT_0000010.LAB	3/5/2020	15:10:52	149.9	0.979	0.006	3.414	0.003	0.001	-0.030	49128.894	22.744	0.826
ZERO DIRECT_0000011.LAB	3/5/2020	15:11:07	149.8	0.978	-0.004	0.454	0.000	0.000	0.043	49731.344	-26.644	0.840
ZERO DIRECT_0000012.LAB	3/5/2020	15:11:22	149.8	0.979	-0.010	-0.477	0.000	0.000	0.010	53498.602	-31.758	0.932
ZERO DIRECT_0000013.LAB	3/5/2020	15:11:36	149.8	0.978	-0.004	-0.732	-0.001	0.000	-0.064	53372.378	12.256	0.929
ZERO DIRECT_0000014.LAB	3/5/2020	15:11:51	149.8	0.979	-0.004	0.546	0.001	0.000	0.211	50911.951	-106.437	0.868
ZERO DIRECT_0000015.LAB	3/5/2020	15:12:06	149.8	0.978	0.030	1.216	0.001	0.000	0.317	51228.433	-134.165	0.876
ZERO DIRECT_0000016.LAB	3/5/2020	15:12:21	149.8	0.979	-0.003	-0.426	0.000	0.000	0.014	52956.132	52.876	0.918
FILTER SPECTRUM_0000017.LAB	3/5/2020	15:12:35	149.8	0.978	0.000	0.000	0.000	0.000	0.000	50452.652	0.000	0.857
FILTER SPECTRUM_0000018.LAB	3/5/2020	15:12:50	149.9	0.979	-0.001	-0.038	-0.00004	0.000	0.087	51512.721	38.465	0.883
STACK EMISSIONS_0000019.LAB	3/5/2020	15:13:54	150.4	0.978	-0.022	13.487	0.01349	0.004	-0.034	47944.233	-35.963	0.799
STACK EMISSIONS_0000020.LAB	3/5/2020	15:14:53	150.7	0.979	-0.038	14.838	0.01484	0.005	-0.240	53061.152	52.369	0.923
STACK EMISSIONS_0000021.LAB	3/5/2020	15:15:52	150.1	0.979	-0.029	13.982	0.01398	0.005	-0.178	48598.307	-45.301	0.814
STACK EMISSIONS_0000022.LAB	3/5/2020	15:16:51	149.9	0.979	-0.019	13.894	0.01389	0.005	-0.028	48570.760	-139.045	0.813
STACK EMISSIONS_0000023.LAB	3/5/2020	15:17:50	149.8	0.979	-0.013	13.506	0.01351	0.005	0.117	52063.034	-217.165	0.896
STACK EMISSIONS_0000024.LAB	3/5/2020	15:18:49	149.8	0.979	-0.008	15.523	0.01552	0.006	0.131	53798.089	-210.036	0.940
STACK EMISSIONS_0000025.LAB	3/5/2020	15:19:48	150.0	0.979	0.011	13.737	0.01374	0.005	0.323	49608.700	-279.500	0.837
STACK EMISSIONS_0000026.LAB	3/5/2020	15:20:47	150.4	0.979	0.005	16.537	0.01654	0.006	0.238	49839.363	-216.618	0.843
STACK EMISSIONS_0000027.LAB	3/5/2020	15:21:46	150.5	0.979	0.009	16.111	0.01611	0.006	0.238	52265.570	-204.434	0.903
STACK EMISSIONS_0000028.LAB	3/5/2020	15:22:44	150.2	0.979	0.009	14.778	0.01478	0.005	0.335	49978.228	-296.546	0.846
STACK EMISSIONS_0000029.LAB	3/5/2020	15:23:43	150.0	0.979	-0.002	12.946	0.01295	0.004	0.214	50221.655	-203.470	0.851
STACK EMISSIONS_0000030.LAB	3/5/2020	15:24:42	149.8	0.979	0.009	12.748	0.01275	0.004	0.320	50879.195	-282.784	0.867
STACK EMISSIONS_0000031.LAB	3/5/2020	15:25:41	149.8	0.979	0.029	15.136	0.01514	0.005	0.495	49974.466	-332.394	0.845
STACK EMISSIONS_0000032.LAB	3/5/2020	15:26:40	150.1	0.979	0.026	15.510	0.01551	0.006	0.476	52287.482	-276.328	0.902
STACK EMISSIONS_0000033.LAB	3/5/2020	15:27:39	150.5	0.979	0.030	16.395	0.01640	0.006	0.459	51697.904	-217.559	0.888
STACK EMISSIONS_0000034.LAB	3/5/2020	15:28:38	150.4	0.979	0.022	14.790	0.01479	0.005	0.460	52632.179	-144.776	0.911
STACK EMISSIONS_0000035.LAB	3/5/2020	15:29:37	150.1	0.979	0.011	15.120	0.01512	0.006	0.402	54009.638	-164.343	0.945
STACK EMISSIONS_0000036.LAB	3/5/2020	15:30:36	150.0	0.979	0.011	15.669	0.01567	0.006	0.442	55393.849	-170.568	0.981
STACK EMISSIONS_0000037.LAB	3/5/2020	15:31:34	149.9	0.979	0.035	14.300	0.01430	0.005	0.579	50176.916	-164.932	0.850

STACK EMISSIONS_0000038.LAB	3/5/2020	15:32:33	149.8	0.980	0.021	13.328	0.01333	0.005	0.556	52436.106	-163.520	0.905
STACK EMISSIONS_0000039.LAB	3/5/2020	15:33:32	150.1	0.979	0.019	12.197	0.01220	0.004	0.587	52537.289	-123.357	0.908
STACK EMISSIONS_0000040.LAB	3/5/2020	15:34:31	150.5	0.979	0.027	14.519	0.01452	0.005	0.583	50250.755	-71.711	0.853
STACK EMISSIONS_0000041.LAB	3/5/2020	15:35:30	150.5	0.979	0.042	15.687	0.01569	0.005	0.699	51020.585	-120.476	0.871
STACK EMISSIONS_0000042.LAB	3/5/2020	15:36:29	150.1	0.979	0.026	14.006	0.01401	0.005	0.661	53008.358	-64.236	0.920
STACK EMISSIONS_0000043.LAB	3/5/2020	15:37:28	149.9	0.979	0.045	12.541	0.01254	0.005	0.802	52881.168	-160.822	0.916
STACK EMISSIONS_0000044.LAB	3/5/2020	15:38:27	149.9	0.979	0.026	12.463	0.01246	0.004	0.581	50509.170	-54.969	0.857
STACK EMISSIONS_0000045.LAB	3/5/2020	15:39:25	149.8	0.980	0.032	12.123	0.01212	0.004	0.645	49620.402	-39.393	0.836
STACK EMISSIONS_0000046.LAB	3/5/2020	15:40:24	150.0	0.979	0.028	12.592	0.01259	0.005	0.642	52278.952	-70.191	0.901
STACK EMISSIONS_0000047.LAB	3/5/2020	15:41:23	150.5	0.980	0.043	13.337	0.01334	0.005	0.804	49739.799	-35.082	0.840
							0.01373	**0.00483**		**51293.20089**		
STACK EMISSIONS_0000048.LAB	3/5/2020	15:42:22	150.5	0.980	0.042	13.694	0.01369	0.005	0.714	52487.031	-27.893	0.907
STACK EMISSIONS_0000049.LAB	3/5/2020	15:43:21	150.1	0.979	0.038	13.981	0.014	0.005	0.752	47952.555	-11.448	0.798
STACK EMISSIONS_0000050.LAB	3/5/2020	15:44:20	149.9	0.980	0.033	12.975	0.013	0.005	0.841	53731.697	-84.754	0.937
STACK EMISSIONS_0000051.LAB	3/5/2020	15:45:19	149.8	0.979	0.043	11.090	0.011	0.004	0.838	51362.924	-44.511	0.878

MAX
Analytical Technologies

Dataset Name:	MAX CEMS RA Test Data Run #8
Project Name:	
Project Date:	
Sample Description:	
Sample Temperature (C):	
Testing Professional:	
Analysis Date:	
Instrument Method:	
Quant Method:	EMS-10 Ethylene Oxide [Medline] (Modified)
Results Averaging:	Off
Dataset Comments:	

Gas	Span
DP K-Factor	NA
Ethane [150C] [74-84-0] [2x8cm-1] [Aromatics Filter]	NA
Ethylene Oxide (ppb)	NA
Ethylene Oxide [150C] [75-21-8] [2x8cm-1] [Aromatics Filter]	NA
Ethylene Oxide Mass Emission Rate (lb/hr)	NA
Filter Interference.LAB	NA
Methane [150C] [74-82-8] [2x8cm-1] [Aromatics Filter] [SN110383419] 02-28	NA
Stack Velocity (ft/sec)	NA
Volumetric Stack Flow (scfm)	NA
Water [150C] [7732-18-5] [2x8cm-1] [Aromatics Filter] [SN110383419] 02-28	NA
MAX.MKS.LASERPP	NA
UD.Stack Differential Pressure (in H2O)	NA
UD.Stack Temperature (degrees F)	NA

MAX Analytical Technologies

Table contains unaveraged concentration values.

Spectrum	Date	Time	Temp	Pressure	Ethane [150C] [74-84-0] [2x8cm-1] [Aromatics Filter]	Ethylene Oxide (ppb)	Ethylene Oxide [150C] [75-21-8] [2x8cm-1]	Ethylene Oxide Mass Emission Rate (lb/hr)	Methane [150C] [74 82-8] [2x8cm-1] [Aromatics Filter]	Volumetric Stack Flow (scfm)	Water [150C] [7732-18-5] [2x8cm-1] [Aromatics Filter]	UD.Stack Differential Pressure (in H2O)
			(C)	(ATM)	Con (ppm)	Con (ppm)	Con (ppm)	Con (ppm)	Con (ppm)	Con (ppm)	Con (ppm)	Con (ppm)
ZERO DIRECT_0000001.LAB	3/5/2020	16:03:26	150.5	0.979	-0.019	0.927	0.001	0.000	-0.170	52967.676	68.613	0.918
ZERO DIRECT_0000002.LAB	3/5/2020	16:03:41	150.4	0.979	-0.026	-1.177	-0.001	0.000	-0.109	51299.400	70.839	0.877
ZERO DIRECT_0000003.LAB	3/5/2020	16:03:56	150.4	0.979	0.003	2.847	0.003	0.001	-0.107	51710.953	-23.544	0.887
ZERO DIRECT_0000004.LAB	3/5/2020	16:04:10	150.3	0.979	-0.009	1.212	0.001	0.000	-0.090	53254.723	-1.572	0.925
ZERO DIRECT_0000005.LAB	3/5/2020	16:04:25	150.1	0.979	-0.008	1.910	0.002	0.001	-0.189	50369.078	-8.218	0.854
ZERO DIRECT_0000006.LAB	3/5/2020	16:04:40	150.1	0.980	-0.007	3.849	0.004	0.001	-0.093	52967.926	-65.076	0.917
ZERO DIRECT_0000007.LAB	3/5/2020	16:04:55	150.1	0.979	0.013	0.031	0.000	0.000	0.037	49782.366	-44.782	0.839
ZERO DIRECT_0000008.LAB	3/5/2020	16:05:09	150.0	0.979	-0.015	2.178	0.002	0.001	0.019	53248.410	-75.165	0.924
ZERO DIRECT_0000009.LAB	3/5/2020	16:05:24	150.0	0.979	0.010	2.964	0.003	0.001	-0.077	54148.262	-106.050	0.947
ZERO DIRECT_0000010.LAB	3/5/2020	16:05:39	149.9	0.979	-0.001	1.014	0.001	0.000	-0.139	51111.849	-6.923	0.871
ZERO DIRECT_0000011.LAB	3/5/2020	16:05:53	149.9	0.980	-0.017	0.783	0.001	0.000	-0.075	51797.162	-82.471	0.888
ZERO DIRECT_0000012.LAB	3/5/2020	16:06:08	149.8	0.980	0.004	-0.079	0.000	0.000	0.085	52423.453	-200.628	0.903
ZERO DIRECT_0000013.LAB	3/5/2020	16:06:23	149.8	0.980	0.028	1.957	0.002	0.001	0.060	54741.810	-202.390	0.962
ZERO DIRECT_0000014.LAB	3/5/2020	16:06:38	149.8	0.980	0.024	0.710	0.001	0.000	0.043	51046.277	-224.164	0.869
ZERO DIRECT_0000015.LAB	3/5/2020	16:06:52	149.9	0.979	-0.006	-1.832	-0.002	-0.001	-0.204	51849.868	-7.792	0.889
ZERO DIRECT_0000016.LAB	3/5/2020	16:07:07	149.9	0.979	-0.003	1.995	0.002	0.001	-0.008	52210.747	-131.678	0.898
FILTER SPECTRUM_0000017.LAB	3/5/2020	16:07:22	149.8	0.980	0.000	0.000	0.000	0.000	0.000	52599.326	0.000	0.907
FILTER SPECTRUM_0000018.LAB	3/5/2020	16:07:37	149.8	0.979	-0.012	0.573	0.001	0.000	-0.080	51450.183	39.534	0.879
STACK EMISSIONS_0000019.LAB	3/5/2020	16:08:41	150.3	0.980	-0.031	7.791	0.008	0.003	-0.076	51571.672	-86.655	0.883
STACK EMISSIONS_0000020.LAB	3/5/2020	16:09:40	150.7	0.980	-0.035	8.286	0.00829	0.003	-0.034	50984.462	39.471	0.869
STACK EMISSIONS_0000021.LAB	3/5/2020	16:10:39	150.4	0.980	-0.018	9.811	0.00981	0.003	-0.035	51913.232	-21.616	0.891
STACK EMISSIONS_0000022.LAB	3/5/2020	16:11:37	150.1	0.979	-0.022	8.825	0.00883	0.003	-0.008	54324.533	-74.599	0.952
STACK EMISSIONS_0000023.LAB	3/5/2020	16:12:36	150.0	0.980	-0.019	9.339	0.00934	0.003	0.025	51084.107	-127.792	0.870
STACK EMISSIONS_0000024.LAB	3/5/2020	16:13:35	149.9	0.979	-0.012	7.068	0.00707	0.003	0.174	53298.492	-183.781	0.925
STACK EMISSIONS_0000025.LAB	3/5/2020	16:14:34	150.0	0.980	-0.004	6.563	0.00656	0.002	0.223	54104.611	-169.580	0.945
STACK EMISSIONS_0000026.LAB	3/5/2020	16:15:33	150.1	0.980	0.005	8.226	0.00823	0.003	0.186	50665.794	-130.327	0.860
STACK EMISSIONS_0000027.LAB	3/5/2020	16:16:32	150.5	0.979	-0.010	7.810	0.00781	0.003	0.219	50789.715	-71.684	0.864
STACK EMISSIONS_0000028.LAB	3/5/2020	16:17:31	150.5	0.980	0.000	9.016	0.00902	0.003	0.277	54836.471	-46.201	0.966
STACK EMISSIONS_0000029.LAB	3/5/2020	16:18:30	150.1	0.980	0.011	7.721	0.00772	0.003	0.281	50089.782	-90.547	0.846
STACK EMISSIONS_0000030.LAB	3/5/2020	16:19:28	150.0	0.979	0.010	5.626	0.00563	0.002	0.304	53266.548	-143.234	0.924
STACK EMISSIONS_0000031.LAB	3/5/2020	16:20:27	149.9	0.979	-0.002	4.776	0.00478	0.002	0.196	53102.024	-89.586	0.919
STACK EMISSIONS_0000032.LAB	3/5/2020	16:21:26	149.8	0.980	-0.005	5.385	0.00538	0.002	0.236	50817.229	-75.987	0.863
STACK EMISSIONS_0000033.LAB	3/5/2020	16:22:25	149.8	0.979	-0.008	5.978	0.00598	0.002	0.190	50685.062	-88.260	0.860
STACK EMISSIONS_0000034.LAB	3/5/2020	16:23:24	150.4	0.980	0.009	5.198	0.00520	0.002	0.309	53243.780	-56.036	0.924
STACK EMISSIONS_0000035.LAB	3/5/2020	16:24:23	150.7	0.980	0.021	7.688	0.00769	0.003	0.425	52524.412	-85.690	0.906
STACK EMISSIONS_0000036.LAB	3/5/2020	16:25:22	150.3	0.979	0.006	7.006	0.00701	0.003	0.321	52864.236	-19.155	0.914
STACK EMISSIONS_0000037.LAB	3/5/2020	16:26:21	150.1	0.980	0.017	5.877	0.00588	0.002	0.387	52522.217	-143.315	0.905

STACK EMISSIONS_0000038.LAB	3/5/2020	16:27:20	150.0	0.979	0.019	4.762	0.00476	0.002	0.358	49607.828	-119.709	0.834
STACK EMISSIONS_0000039.LAB	3/5/2020	16:28:18	149.9	0.980	0.009	6.302	0.00630	0.002	0.408	48084.945	-131.659	0.799
STACK EMISSIONS_0000040.LAB	3/5/2020	16:29:17	149.9	0.980	0.013	4.972	0.00497	0.002	0.408	53031.992	-155.348	0.917
STACK EMISSIONS_0000041.LAB	3/5/2020	16:30:16	150.3	0.980	0.012	4.297	0.00430	0.001	0.399	50426.461	-78.355	0.854
STACK EMISSIONS_0000042.LAB	3/5/2020	16:31:15	150.7	0.980	0.027	6.044	0.00604	0.002	0.537	50431.186	-38.805	0.855
STACK EMISSIONS_0000043.LAB	3/5/2020	16:32:14	150.4	0.980	0.031	6.322	0.00632	0.002	0.434	51873.473	-35.344	0.890
STACK EMISSIONS_0000044.LAB	3/5/2020	16:33:13	150.1	0.980	0.018	7.143	0.00714	0.003	0.458	51904.609	-91.972	0.890
STACK EMISSIONS_0000045.LAB	3/5/2020	16:34:12	150.0	0.980	0.022	5.153	0.00515	0.002	0.457	50192.344	-126.913	0.848
STACK EMISSIONS_0000046.LAB	3/5/2020	16:35:11	149.9	0.980	0.015	4.615	0.00462	0.002	0.320	50166.323	-86.295	0.847
STACK EMISSIONS_0000047.LAB	3/5/2020	16:36:09	150.0	0.980	0.002	4.692	0.00469	0.002	0.341	50712.693	-128.362	0.860
STACK EMISSIONS_0000048.LAB	3/5/2020	16:37:08	150.0	0.980	0.008	4.122	0.00412	0.001	0.398	51310.175	-165.792	0.875
STACK EMISSIONS_0000049.LAB	3/5/2020	16:38:07	151.1	0.980	0.019	6.621	0.00662	0.002	0.403	53403.353	-86.768	0.928
							0.00651	**0.00231**		**51742.06958**		
STACK EMISSIONS_0000050.LAB	3/5/2020	16:39:06	150.7	0.980	0.028	8.475	0.008	0.003	0.439	50243.198	-32.434	0.850
STACK EMISSIONS_0000051.LAB	3/5/2020	16:40:05	150.1	0.980	0.019	6.105	0.006	0.002	0.417	48989.545	-116.330	0.820
STACK EMISSIONS_0000052.LAB	3/5/2020	16:41:04	150.0	0.980	-0.003	4.580	0.005	0.002	0.339	49875.695	-159.895	0.841
STACK EMISSIONS_0000053.LAB	3/5/2020	16:42:03	149.8	0.980	0.022	4.486	0.004	0.002	0.362	55550.214	-251.431	0.983
STACK EMISSIONS_0000054.LAB	3/5/2020	16:43:02	149.9	0.980	0.007	5.870	0.006	0.002	0.386	49684.337	-216.319	0.836
STACK EMISSIONS_0000055.LAB	3/5/2020	16:44:01	149.8	0.980	0.017	4.364	0.004	0.002	0.351	50606.054	-250.281	0.858
STACK EMISSIONS_0000056.LAB	3/5/2020	16:44:59	149.9	0.980	0.021	3.492	0.003	0.001	0.462	52155.669	-308.952	0.896
STACK EMISSIONS_0000057.LAB	3/5/2020	16:45:58	150.4	0.980	0.015	5.113	0.005	0.002	0.514	51344.631	-248.057	0.877
STACK EMISSIONS_0000058.LAB	3/5/2020	16:46:57	150.5	0.980	0.032	5.902	0.006	0.002	0.609	53071.249	-273.739	0.920
STACK EMISSIONS_0000059.LAB	3/5/2020	16:47:56	150.1	0.980	0.024	5.235	0.005	0.002	0.573	52732.681	-251.344	0.911
STACK EMISSIONS_0000060.LAB	3/5/2020	16:48:55	149.9	0.980	0.016	3.398	0.003	0.001	0.475	51624.675	-178.873	0.883
STACK EMISSIONS_0000061.LAB	3/5/2020	16:49:54	149.9	0.980	0.012	4.823	0.005	0.002	0.335	51051.977	-184.170	0.869
STACK EMISSIONS_0000062.LAB	3/5/2020	16:50:53	149.8	0.980	0.015	3.447	0.003	0.001	0.394	52633.466	-218.642	0.907
STACK EMISSIONS_0000063.LAB	3/5/2020	16:51:52	149.8	0.980	0.034	2.923	0.003	0.001	0.726	52216.166	-336.315	0.897

MAX^{tm} EMS-10^{tm}
Ethylene Oxide
Emission Rate Calculation at LOD

Company: Medline Industries
Location: Waukegan, Illinois
Source: ETO Abatement System Common Stack
Test Date: 3/5/2020
Test Run #: 8
Test Time: 1609-1639

Data Input:

Average FTIR reading (C):	0.0100	**ppmv wb**
Stack gas volumetric flow rate (Q_{std}):	3,104,520	**scfh**
Compound molecular weight (MW):	44.05	**lb/lb-mole**

Sample calculations @ standard conditions (29.92 inches Hg, 68.0 °F):

Ethylene Oxide
Calculated FTIR Concentration:

= 0.0100 **ppmv wb**

Ethylene Oxide
Calculated FTIR Concentration:

$$C_{gas,lb/scf} = C_{gas} \times \left(\frac{MW\ lb/lb-mole}{385.26 \times 10^6\ ft^3\ /\ lb-mole} \right)$$ = 0.00114 **x 10-6 lb/scf**

$$C_{gas,mg/scm} = C_{gas,lb/dscf} \times 16.0319$$ = 0.0183 **mg/scm**

Ethylene Oxide
Emission rate:

$$E_{gas,lb/hr} = (C_{gas,lb/dscf}) \times (Q_{std})$$ = 0.00355 **lb/hr**

Medline Data @ LOQ

MAX
Analytical Technologies

Dataset Name:	MAX CEMS RA Test Data Run #9
Project Name:	
Project Date:	
Sample Description:	
Sample Temperature (C):	
Testing Professional:	
Analysis Date:	
Instrument Method:	
Quant Method:	EMS-10 Ethylene Oxide [Medline] (Modified)
Results Averaging:	Off
Dataset Comments:	

Gas	Span
DP K-Factor	NA
Ethane [150C] [74-84-0] [2x8cm-1] [Aromatics Filter]	NA
Ethylene Oxide (ppb)	NA
Ethylene Oxide [150C] [75-21-8] [2x8cm-1] [Aromatics Filter]	NA
Ethylene Oxide Mass Emission Rate (lb/hr)	NA
Filter Interference.LAB	NA
Methane [150C] [74-82-8] [2x8cm-1] [Aromatics Filter] [SN110383419] 02-28	NA
Stack Velocity (ft/sec)	NA
Volumetric Stack Flow (scfm)	NA
Water [150C] [7732-18-5] [2x8cm-1] [Aromatics Filter] [SN110383419] 02-28	NA
MAX.MKS.LASERPP	NA
UD.Stack Differential Pressure (in H2O)	NA
UD.Stack Temperature (degrees F)	NA

MAX Analytical Technologies

Table contains unaveraged concentration values.

Spectrum	Date	Time	Temp	Pressure	Ethane [150C] [74-84-0] [2x8cm-1] [Accumulation Filtered]	Ethylene Oxide (ppb)	Ethylene Oxide [150C] [75-21-8] [2x8cm-1]	Ethylene Oxide Mass Emission Rate (lb/hr)	Methane [150C] [74-82-8] [2x8cm-1] [Accumulation Filtered]	Volumetric Stack Flow (scfm)	Water [150C] [7732-18-5] [2x8cm-1] [Accumulation Filtered]	CO2 Stack Differential Pressure (in H2O)
			(C)	(ATM)	Con (ppm)	Con (ppm)	Con (ppm)	Con (ppm)	Con (ppm)	Con (ppm)	Con (ppm)	Con (ppm)
ZERO DIRECT_0000001.LAB	3/5/2020	16:58:05	149.9	0.979	0.024	-4.939	-0.005	-0.002	0.328	51016.152	-170.040	0.868
ZERO DIRECT_0000002.LAB	3/5/2020	16:58:20	149.9	0.979	0.020	-3.299	-0.003	-0.001	0.364	52818.384	-354.038	0.912
ZERO DIRECT_0000003.LAB	3/5/2020	16:58:35	149.8	0.979	0.026	-5.288	-0.005	-0.002	0.095	50446.392	-215.609	0.854
ZERO DIRECT_0000004.LAB	3/5/2020	16:58:49	149.8	0.980	0.003	-0.224	0.000	0.000	0.240	49954.608	-282.307	0.842
ZERO DIRECT_0000005.LAB	3/5/2020	16:59:04	149.8	0.980	0.027	-2.743	-0.003	-0.001	0.306	50932.694	-236.504	0.865
ZERO DIRECT_0000006.LAB	3/5/2020	16:59:19	149.8	0.980	-0.004	-3.854	-0.004	-0.001	0.285	52028.188	-200.932	0.892
ZERO DIRECT_0000007.LAB	3/5/2020	16:59:34	149.8	0.979	-0.003	-2.008	-0.002	-0.001	0.085	48286.374	-172.374	0.803
ZERO DIRECT_0000008.LAB	3/5/2020	16:59:48	149.8	0.980	0.002	-4.516	-0.005	-0.002	0.157	51839.113	-101.905	0.887
ZERO DIRECT_0000009.LAB	3/5/2020	17:00:03	149.8	0.980	-0.003	-3.818	-0.004	-0.001	0.034	49607.918	-111.442	0.834
ZERO DIRECT_0000010.LAB	3/5/2020	17:00:18	149.9	0.979	-0.008	-3.792	-0.004	-0.001	0.070	49639.463	-140.789	0.835
ZERO DIRECT_0000011.LAB	3/5/2020	17:00:32	150.0	0.980	0.007	-3.319	-0.003	-0.001	0.115	51844.652	-240.938	0.888
ZERO DIRECT_0000012.LAB	3/5/2020	17:00:47	150.1	0.980	0.002	-1.739	-0.002	-0.001	0.110	54947.631	-172.869	0.967
ZERO DIRECT_0000013.LAB	3/5/2020	17:01:02	150.2	0.979	-0.019	-4.930	-0.005	-0.002	0.065	53150.652	-137.264	0.921
ZERO DIRECT_0000014.LAB	3/5/2020	17:01:17	150.3	0.980	-0.015	-1.357	-0.001	-0.001	0.071	53874.452	-160.832	0.940
ZERO DIRECT_0000015.LAB	3/5/2020	17:01:31	150.4	0.980	-0.001	-2.128	-0.002	-0.001	0.127	54098.171	-161.254	0.946
ZERO DIRECT_0000016.LAB	3/5/2020	17:01:46	150.5	0.979	-0.014	-0.439	0.000	0.000	0.060	54780.893	-91.737	0.964
FILTER SPECTRUM_0000017.LAB	3/5/2020	17:02:01	150.5	0.980	0.000	0.000	0.000	0.000	0.000	48868.998	0.000	0.818
FILTER SPECTRUM_0000018.LAB	3/5/2020	17:02:16	150.7	0.980	0.011	-2.617	-0.003	-0.001	0.139	50722.405	-137.622	0.862
STACK EMISSIONS_0000019.LAB	3/5/2020	17:03:20	150.1	0.980	-0.018	-0.579	-0.001	0.000	0.096	51637.505	-300.929	0.884
STACK EMISSIONS_0000020.LAB	3/5/2020	17:04:19	150.0	0.980	-0.028	-0.603	-0.001	0.000	0.002	49704.226	-340.812	0.837
STACK EMISSIONS_0000021.LAB	3/5/2020	17:05:18	149.9	0.980	-0.025	0.663	0.001	0.000	0.080	54585.558	-396.452	0.957
STACK EMISSIONS_0000022.LAB	3/5/2020	17:06:17	149.8	0.981	-0.029	-1.080	-0.001	0.000	-0.011	50995.280	-422.500	0.867
STACK EMISSIONS_0000023.LAB	3/5/2020	17:07:16	149.9	0.980	-0.035	-0.556	-0.001	0.000	0.023	47526.010	-349.369	0.786
STACK EMISSIONS_0000024.LAB	**3/5/2020**	**17:08:15**	**149.9**	**0.980**	**-0.031**	**-1.435**	**-0.00144**	**0.000**	**0.045**	**47597.040**	**-347.505**	**0.788**
STACK EMISSIONS_0000025.LAB	**3/5/2020**	**17:09:14**	**150.3**	**0.980**	**-0.038**	**0.037**	**0.00004**	**0.000**	**-0.069**	**52101.352**	**-260.091**	**0.895**
STACK EMISSIONS_0000026.LAB	**3/5/2020**	**17:10:13**	**150.7**	**0.980**	**-0.031**	**1.608**	**0.00161**	**0.001**	**-0.040**	**50538.735**	**-266.213**	**0.858**
STACK EMISSIONS_0000027.LAB	**3/5/2020**	**17:11:11**	**150.2**	**0.980**	**-0.028**	**1.278**	**0.00128**	**0.000**	**-0.032**	**51801.462**	**-219.361**	**0.888**
STACK EMISSIONS_0000028.LAB	**3/5/2020**	**17:12:10**	**150.0**	**0.980**	**-0.022**	**-0.433**	**-0.00043**	**0.000**	**0.151**	**50722.175**	**-305.274**	**0.861**
STACK EMISSIONS_0000029.LAB	**3/5/2020**	**17:13:09**	**150.0**	**0.980**	**-0.028**	**-1.486**	**-0.00149**	**-0.001**	**0.157**	**50837.906**	**-336.815**	**0.863**
STACK EMISSIONS_0000030.LAB	**3/5/2020**	**17:14:08**	**149.8**	**0.980**	**-0.042**	**-1.521**	**-0.00152**	**-0.001**	**0.037**	**54682.577**	**-322.727**	**0.959**
STACK EMISSIONS_0000031.LAB	**3/5/2020**	**17:15:07**	**149.9**	**0.980**	**-0.037**	**-1.954**	**-0.00195**	**-0.001**	**0.004**	**53589.324**	**-308.449**	**0.931**
STACK EMISSIONS_0000032.LAB	**3/5/2020**	**17:16:06**	**149.9**	**0.980**	**-0.029**	**-2.211**	**-0.00221**	**-0.001**	**0.112**	**53602.340**	**-329.607**	**0.932**
STACK EMISSIONS_0000033.LAB	**3/5/2020**	**17:17:05**	**150.3**	**0.980**	**-0.036**	**0.388**	**0.00039**	**0.000**	**0.104**	**52110.240**	**-279.459**	**0.895**
STACK EMISSIONS_0000034.LAB	**3/5/2020**	**17:18:04**	**150.7**	**0.980**	**-0.017**	**2.369**	**0.00237**	**0.001**	**0.083**	**50333.902**	**-310.134**	**0.853**
STACK EMISSIONS_0000035.LAB	**3/5/2020**	**17:19:02**	**150.3**	**0.980**	**-0.004**	**0.883**	**0.00088**	**0.000**	**0.172**	**53816.126**	**-360.521**	**0.938**
STACK EMISSIONS_0000036.LAB	**3/5/2020**	**17:20:01**	**150.0**	**0.980**	**-0.025**	**-0.897**	**-0.00090**	**0.000**	**0.150**	**53791.099**	**-376.724**	**0.937**
STACK EMISSIONS_0000037.LAB	**3/5/2020**	**17:21:00**	**149.9**	**0.980**	**-0.027**	**-2.039**	**-0.00204**	**-0.001**	**0.176**	**55994.118**	**-371.771**	**0.994**
STACK EMISSIONS_0000038.LAB	**3/5/2020**	**17:21:59**	**149.9**	**0.980**	**-0.037**	**-1.813**	**-0.00181**	**-0.001**	**0.065**	**51857.507**	**-291.286**	**0.888**

STACK EMISSIONS_0000039.LAB	3/5/2020	17:22:58	149.8	0.980	-0.031	-2.168	-0.00217	-0.001	0.124	54065.430	-362.553	0.943
STACK EMISSIONS_0000040.LAB	3/5/2020	17:23:57	149.9	0.980	-0.029	-1.014	-0.00101	0.000	0.164	53139.621	-347.914	0.920
STACK EMISSIONS_0000041.LAB	3/5/2020	17:24:56	150.3	0.980	-0.006	-0.530	-0.00053	0.000	0.267	50525.068	-374.348	0.857
STACK EMISSIONS_0000042.LAB	3/5/2020	17:25:55	150.7	0.980	-0.014	1.489	0.00149	0.001	0.223	53123.122	-231.138	0.921
STACK EMISSIONS_0000043.LAB	3/5/2020	17:26:54	150.3	0.980	-0.028	-0.105	-0.00011	0.000	0.179	51358.456	-216.751	0.877
STACK EMISSIONS_0000044.LAB	3/5/2020	17:27:52	150.0	0.980	-0.025	-2.507	-0.00251	-0.001	0.117	50703.866	-290.188	0.860
STACK EMISSIONS_0000045.LAB	3/5/2020	17:28:51	149.9	0.980	-0.017	-1.487	-0.00149	-0.001	0.236	52566.092	-363.622	0.906
STACK EMISSIONS_0000046.LAB	3/5/2020	17:29:50	150.0	0.980	0.000	-1.534	-0.00153	-0.001	0.376	52422.837	-445.054	0.902
STACK EMISSIONS_0000047.LAB	3/5/2020	17:30:49	149.8	0.980	-0.020	-0.990	-0.00099	0.000	0.319	50099.845	-304.824	0.845
STACK EMISSIONS_0000048.LAB	3/5/2020	17:31:48	149.9	0.981	-0.030	-1.323	-0.00132	0.000	0.212	52482.750	-329.099	0.903
STACK EMISSIONS_0000049.LAB	3/5/2020	17:32:47	150.2	0.980	-0.014	-0.297	-0.00030	0.000	0.240	51436.156	-384.571	0.878
STACK EMISSIONS_0000050.LAB	3/5/2020	17:33:46	150.7	0.980	0.004	0.296	0.00030	0.000	0.320	50607.863	-400.122	0.859
STACK EMISSIONS_0000051.LAB	3/5/2020	17:34:45	150.3	0.980	-0.006	0.669	0.00067	0.000	0.250	51308.957	-275.762	0.875
STACK EMISSIONS_0000052.LAB	3/5/2020	17:35:43	150.0	0.980	-0.022	-0.820	-0.00082	0.000	0.207	49619.166	-255.440	0.834
STACK EMISSIONS_0000053.LAB	3/5/2020	17:36:42	150.0	0.980	-0.008	-0.950	-0.00095	0.000	0.341	49338.945	-441.358	0.828
STACK EMISSIONS_0000054.LAB	3/5/2020	17:37:41	149.9	0.980	-0.009	-1.638	-0.00164	-0.001	0.269	51362.587	-438.861	0.876
							-0.00065	-0.00023		51856.02134		
STACK EMISSIONS_0000055.LAB	3/5/2020	17:38:40	149.8	0.980	-0.012	-2.087	-0.002	-0.001	0.350	51902.585	-463.453	0.889
STACK EMISSIONS_0000056.LAB	3/5/2020	17:39:39	149.8	0.980	-0.018	-2.184	-0.002	-0.001	0.304	52355.695	-318.869	0.900
STACK EMISSIONS_0000057.LAB	3/5/2020	17:40:38	150.1	0.980	-0.028	-0.886	-0.001	0.000	0.194	50490.136	-343.682	0.855

MAX^{tm} EMS-10^{tm}
Ethylene Oxide
Emission Rate Calculation at LOD

Company: Medline Industries
Location: Waukegan, Illinois
Source: ETO Abatement System Common Stack
Test Date: 3/5/2020
Test Run #: 9
Test Time: 1708-1738

Data Input:

Average FTIR reading (C):	0.0100	**ppmv wb**
Stack gas volumetric flow rate (Q_{std}):	3,111,360	**scfh**
Compound molecular weight (MW):	44.05	**lb/lb-mole**

Sample calculations @ standard conditions (29.92 inches Hg, 68.0 °F):

Ethylene Oxide
Calculated FTIR Concentration:

= 0.0100 **ppmv wb**

Ethylene Oxide
Calculated FTIR Concentration:

$$C_{gas,lb/scf} = C_{gas} \times \left(\frac{MW\ lb/lb-mole}{385.26 \times 10^6\ ft^3 / lb-mole} \right)$$

= 0.00114 **x 10-6 lb/scf**

$$C_{gas,mg/scm} = C_{gas,lb/dscf} \times 16.0319$$

= 0.0183 **mg/scm**

Ethylene Oxide
Emission rate:

$$E_{gas,lb/hr} = \left(C_{gas,lb/dscf}\right) \times \left(Q_{std}\right)$$

= 0.00356 **lb/hr**

Medline Data @ LOQ

MAX
Analytical Technologies

EMS-10/eo Factory Test and Criteria

Demonstration of EO Limit of Detection	LOD (ppb)		
	Reading	Specification	Validation
3 x StDev of direct measurement of UHP nitrogen	2.5	≤ 5.0	PASS
3 x StDev of direct measurement of intf spectra from a representative matri:	3.8	≤ 5.0	PASS
Direct measurement of EO calibration gas diluted to 5 x LOD	9.8	8.8	PASS
Demonstration of EO Limit of Quantification	LOQ (ppb)		
	Reading	Specification	Validation
10 x StDev of direct measurement of UHP nitrogen	7.0	≤ 20.0	PASS
10 x StDev of direct measurement of intf spectra from a representative mat:	10.6	≤ 5.0	PASS
Demonstration of EO Zero Drift	Zero Drift (ppm)		
	Reading	Specification	Validation
Direct measurement of UHP nitrogen	0.000	≤0.005	PASS
Direct measurement of intf spectra from a representative gas matrix	0.003	≤0.005	PASS
Demonstration of EO Calibration Stability	EO Response		
	Ave Reading	Specification	Validation
Direct measurement of 50ppm EO using factory calibration with no span factor (at least 3 days) compared to certified cylinder value	-1.53%	±5%	PASS
Demonstration of minimal EO System Bias	EO System Bias (ppm)		
	Reading	Specification	Validation
System measurement of UHP nitrogen	0.000	≤ LOQ	PASS
Demonstration of CTS stability and Response Time	CTS Response		
	Ave Reading	Specification	Validation
CTS Direct (8 independent measurements) compared to certified value	-1.85%	±5%	PASS
CTS System (8 independent measurements) compared to certified value	-1.15%	±5%	PASS
CTS Response time to 95% of full scale	10.125 sec	< 60 sec	PASS
Validation of Sampling System and EO Recovery	EO Percent Recovery		
	Ave Reading	Specification	Validation
Twelve independent pairs of spiked and unspiked samples. Dilution of 2ppm EO standard not to exceed 10% of total sample flow.	100.6%	70-130%	PASS
Validation of Detector Linearity	Average Signal (mV)		
	Reading	Specification	Validation
Measurement of average detector signal at 2300-2400cm-1	< 1 mV	<|10|mV	PASS

FTIR Serial Number: 110383419
Testing Professional: Kelly McPartland, Max Analytical Technologies
Date: 2019-11-14

MAX
Analytical Technologies

EMS-10/eo Validation and Criteria

Demonstration of Calibration Stability	% of Certified	Criteria	Validation
Ethylene Oxide Direct Measurement	6.79%	±10%	PASS
CTS Direct Measurement (Methane)	3.14%	±5%	PASS
CTS System Measurement (Methane)	0.00%	±5%	PASS
Validation of Sampling System	% of Direct	Criteria	Validation
CTS System Measurement (Methane)	0.00%	±5%	PASS
Analyte Spike Recovery	Result	Criteria	Validation
Average percent recovery of ethylene oxide for twelve independent pairs of spiked and unspiked samples	90.60%	70-130%	PASS
Average Ethylene Oxide Spike Level	137ppb	< 200ppb	PASS
Average Dilution Factor	0.08	< 0.10	PASS
Bias Analysis	B_R	Criteria	Validation
Relative Bias *(Eq. 301-22)*	2.39%	< 10%	PASS
Precision	RSD	Criteria	Validation
Relative Standard Deviation *(Eq. 301-9)*	2.87%	< 20%	PASS
Limit of Detection	LOD (ppb)	Criteria	Validation
Three times the standard deviation in ethylene oxide for twelve independent 1-minute measurements of stack emissions	2.85	< 20 ppb	PASS

FTIR Serial Number: 110383419

Testing Professional: Kelly McPartland, Max Analytical Technologies

Date: 2020-03-06

MAX Analytical Technologies

Certified Calibration Cylinders				
Bottle	Expiration	Gas	Certified Conc (ppm)	Analytical Uncertainty
EB0113081	15-Oct-20	Ethylene Oxide	2.103	±5%
		Ethane	503.1	±2%
CC210851	3-Oct-27	Methane	100.0	±1%

Direct Calibration Checks					
Gas	Response (ppm)	Certified Conc (ppm)	% of Certified	Criteria	Validation
Ethylene Oxide	2.246	2.103	6.79%	±10%	PASS
Ethane	507.0	503.1	0.78%	±5%	PASS
Methane	103.1	100.0	3.14%	±5%	PASS

System Check					
Gas	Response (ppm)	Direct Reading (ppm)	% of Direct	Criteria	Validation
Methane	103.1	103.1	0.00%	±5%	PASS

MAX
Analytical Technologies

Analyte Spike Data												
	Quadruplicate 1		Quadruplicate 2		Quadruplicate 3		Quadruplicate 4		Quadruplicate 5		Quadruplicate 6	
	Sample Pair 1	Sample Pair 2	Sample Pair 1	Sample Pair 2	Sample Pair 1	Sample Pair 2	Sample Pair 1	Sample Pair 2	Sample Pair 1	Sample Pair 2	Sample Pair 1	Sample Pair 2
Dilution Factor												
Ethane in Unspiked Sample (ppm)	-0.127	-0.148	0.146	-0.009	0.101	-0.003	0.004	-0.090	0.040	-0.045	0.094	-0.026
Ethane in Spiked Sample (ppm)	37.83	37.98	38.14	38.22	38.33	38.35	38.21	38.20	38.10	38.15	38.18	38.19
Dilution Factor	0.075	0.075	0.075	0.075	0.075	0.076	0.075	0.076	0.075	0.075	0.075	0.075
Ethylene Oxide Spike Recovery												
EO in Unspiked Sample (ppb)	23.08	20.19	26.88	23.15	15.83	13.60	12.97	11.38	38.62	34.35	26.33	23.31
EO in Spiked Sample (ppb)	168.7	169.7	172.0	169.9	166.4	166.3	163.6	175.2	180.9	180.1	174.4	175.3
Calculated EO Spike Level (ppb)	189.5	187.6	193.2	190.7	184.0	182.5	181.2	180.1	204.3	200.9	193.0	190.8
Percent Recovery (%)	89.0%	90.5%	89.1%	89.1%	90.4%	91.1%	90.3%	97.3%	88.5%	89.6%	90.4%	91.9%
Bias, d_i *(Eq. 301-18)*	-2.303		-4.045		2.181		-0.926		-14.322		-7.768	

Bias Analysis	
Numerical Value of the Bias, B *(Eq. 301-19)*	-4.531
Standard Deviation of the Differences, SD_d *(Eq. 301-20)*	5.824
T-Test, t *(Eq. 301-21)*	1.906
Critical Value, t_{95}	2.571
Relative Bias, B_R *(Eq. 301-22)*	2.39%

Precision	
Standard Deviation of the Test Method, SD *(Eq. 301-23)*	5.442
Relative Standard Deviation, RSD *(Eq. 301-9)*	2.87%

Notes	Spectrum	Date	Time	Temp	Pressure	Ethane	Ethylene Oxide		Methane	Water	MAX.MKS.LASERPP	Stack Temp
			CST	°C	Atm	ppm	ppb	ppm	ppm	ppm	Volts	°F
	ZERO DIRECT_0000001.LAB	3/6/2020	12:28:55	150.0	0.997	1.093	14.227	0.014	17.068	11855.285	8.633	74.884
	ZERO DIRECT_0000002.LAB	3/6/2020	12:29:54	149.9	0.997	1.116	14.726	0.015	17.258	11885.786	8.789	74.768
	ZERO DIRECT_0000003.LAB	3/6/2020	12:30:53	149.9	0.997	1.111	15.446	0.015	17.160	11899.653	8.555	74.679
	FILTER SPECTRUM_0000004.LAB	3/6/2020	12:31:52	150.2	0.997	1.122	14.517	0.015	17.286	11910.705	8.359	75.491
	FILTER SPECTRUM_0000005.LAB	3/6/2020	12:32:51	150.7	0.997	1.123	15.828	0.016	17.402	11943.910	8.438	76.145
	EQUILIBRATE CTS_0000006.LAB	3/6/2020	12:33:07	150.7	0.990	0.031	18.603	0.019	61.377	2882.171	8.594	76.013
	EQUILIBRATE CTS_0000007.LAB	3/6/2020	12:33:22	150.5	0.990	0.265	4.485	0.004	102.545	10.535	8.516	75.952
	EQUILIBRATE CTS_0000008.LAB	3/6/2020	12:33:37	150.4	0.990	0.288	6.629	0.007	102.992	-20.654	8.672	75.769
	EQUILIBRATE CTS_0000009.LAB	3/6/2020	12:33:51	150.2	0.990	0.293	5.608	0.006	103.025	-25.640	8.750	75.684
	CTS DIRECT_0000010.LAB	3/6/2020	12:34:06	150.3	0.990	0.278	6.635	0.007	103.105	-27.196	8.672	75.531
	CTS DIRECT_0000011.LAB	3/6/2020	12:34:21	150.2	0.990	0.284	6.784	0.007	103.111	-29.968	8.281	75.519
	CTS DIRECT_0000012.LAB	3/6/2020	12:34:36	150.2	0.990	0.287	7.292	0.007	103.134	-29.372	8.711	75.385
	CTS DIRECT_0000013.LAB	3/6/2020	12:34:50	150.1	0.990	0.290	7.622	0.008	103.129	-31.269	8.750	75.308
	CTS DIRECT_0000014.LAB	3/6/2020	12:35:05	150.0	0.990	0.294	9.194	0.009	103.140	-31.288	8.438	75.293
	CTS DIRECT_0000015.LAB	3/6/2020	12:35:20	150.0	0.990	0.293	8.441	0.008	103.150	-30.247	8.398	75.168
	CTS DIRECT_0000016.LAB	3/6/2020	12:35:34	150.0	0.990	0.284	11.061	0.011	103.163	-32.008	8.594	75.064
	CTS DIRECT_0000017.LAB	3/6/2020	12:35:49	150.0	0.990	0.290	9.874	0.010	103.167	-32.968	8.477	75.049
Pre CTS Direct Ave						0.288	8.363	0.008	103.137	-30.540	8.540	75.290
	EQUILIBRATE EO_0000018.LAB	3/6/2020	12:36:04	150.0	0.991	102.094	656.087	0.656	62.363	296.358	8.398	74.988
	EQUILIBRATE EO_0000019.LAB	3/6/2020	12:36:19	150.0	0.991	498.497	2197.873	2.198	1.054	203.945	8.320	74.985
	EQUILIBRATE EO_0000020.LAB	3/6/2020	12:36:33	150.0	0.991	506.479	2239.258	2.239	-0.353	204.133	8.672	74.948
	EQUILIBRATE EO_0000021.LAB	3/6/2020	12:36:48	150.0	0.991	506.911	2240.701	2.241	-0.406	207.508	8.477	74.960
	EQUILIBRATE CTS_0000022.LAB	3/6/2020	12:37:03	150.0	0.991	506.940	2247.417	2.247	-0.425	207.520	8.281	74.905
	EQUILIBRATE CTS_0000023.LAB	3/6/2020	12:37:17	149.9	0.991	92.606	528.420	0.528	70.760	245.083	8.633	74.905
	EQUILIBRATE CTS_0000024.LAB	3/6/2020	12:37:32	149.9	0.991	2.279	21.669	0.022	102.747	-28.205	8.516	74.878
	EQUILIBRATE CTS_0000025.LAB	3/6/2020	12:37:47	149.9	0.991	0.649	10.634	0.011	103.043	-33.111	8.281	74.856
	CTS DIRECT_0000026.LAB	3/6/2020	12:38:02	149.9	0.991	0.438	11.112	0.011	103.070	-33.475	8.438	74.801
	CTS DIRECT_0000027.LAB	3/6/2020	12:38:16	149.8	0.991	0.383	11.740	0.012	103.063	-32.887	8.516	74.811
	CTS DIRECT_0000028.LAB	3/6/2020	12:38:31	149.8	0.991	0.350	11.237	0.011	103.074	-33.341	8.359	74.808
	CTS DIRECT_0000029.LAB	3/6/2020	12:38:46	149.9	0.991	0.357	7.897	0.008	103.108	-33.366	8.242	74.756
	CTS DIRECT_0000030.LAB	3/6/2020	12:39:01	149.9	0.991	0.325	9.138	0.009	103.118	-34.018	8.633	74.756
	CTS DIRECT_0000031.LAB	3/6/2020	12:39:15	149.8	0.991	0.326	8.396	0.008	103.096	-35.409	8.594	74.789
	CTS DIRECT_0000032.LAB	3/6/2020	12:39:30	149.8	0.991	0.325	10.176	0.010	103.109	-34.373	8.594	74.783
	CTS DIRECT_0000033.LAB	3/6/2020	12:39:45	149.8	0.991	0.323	10.627	0.011	103.113	-34.999	8.320	74.798
	CTS DIRECT_0000034.LAB	3/6/2020	12:39:59	149.8	0.991	0.317	10.856	0.011	103.130	-35.074	8.477	74.786
	EQUILIBRATE EO_0000035.LAB	3/6/2020	12:40:14	149.8	0.991	118.375	776.343	0.776	57.399	165.846	8.477	74.844

Notes	Spectrum	Date	Time	Temp	Pressure	Ethane	Ethylene Oxide		Methane	Water	MAX.MKS.LASERPP	Stack Temp
			CST	°C	Atm	ppm	ppb	ppm	ppm	ppm	Volts	°F
	EQUILIBRATE EO_0000036.LAB	3/6/2020	12:40:29	149.8	0.991	500.014	2208.264	2.208	0.791	186.083	8.320	74.841
	EQUILIBRATE EO_0000037.LAB	3/6/2020	12:40:44	149.8	0.991	506.845	2243.055	2.243	-0.348	198.768	8.281	74.856
	EQUILIBRATE EO_0000038.LAB	3/6/2020	12:40:58	149.8	0.991	507.339	2244.524	2.245	-0.401	202.462	8.242	74.930
	EO DIRECT_0000039.LAB	3/6/2020	12:41:13	149.8	0.991	507.358	2246.321	2.246	-0.418	200.493	8.555	74.853
	EO DIRECT_0000040.LAB	3/6/2020	12:41:28	149.8	0.991	507.335	2247.253	2.247	-0.420	201.552	8.320	74.881
	EO DIRECT_0000041.LAB	3/6/2020	12:41:42	149.7	0.991	507.282	2245.472	2.245	-0.432	199.373	8.242	75.168
	EO DIRECT_0000042.LAB	3/6/2020	12:41:57	149.9	0.991	507.305	2244.262	2.244	-0.437	200.224	8.516	75.360
	EO DIRECT_0000043.LAB	3/6/2020	12:42:12	150.0	0.991	506.995	2246.049	2.246	-0.436	198.030	8.320	75.632
	EO DIRECT_0000044.LAB	3/6/2020	12:42:27	150.2	0.991	506.773	2246.788	2.247	-0.444	199.988	8.359	75.928
	EO DIRECT_0000045.LAB	3/6/2020	12:42:41	150.3	0.991	506.501	2246.056	2.246	-0.450	197.064	8.555	76.172
	EO DIRECT_0000046.LAB	3/6/2020	12:42:56	150.4	0.991	506.504	2244.761	2.245	-0.454	200.645	8.438	76.352
Pre Cal Direct Ave						507.007	2245.870	2.246	-0.436	199.671	8.413	75.543
	EQUILIBRATE CTS_0000047.LAB	3/6/2020	12:43:11	150.5	0.997	174.359	1210.082	1.210	6.584	5680.122	8.477	76.401
	EQUILIBRATE CTS_0000048.LAB	3/6/2020	12:43:25	150.4	0.997	17.846	76.611	0.077	87.679	845.167	8.516	76.309
	EQUILIBRATE CTS_0000049.LAB	3/6/2020	12:43:40	150.4	0.998	0.552	8.366	0.008	102.705	201.101	8.359	76.218
	EQUILIBRATE CTS_0000050.LAB	3/6/2020	12:43:55	150.3	0.998	0.436	9.133	0.009	102.839	160.831	8.516	76.142
	CTS SYSTEM_0000051.LAB	3/6/2020	12:44:10	150.2	0.997	0.405	8.842	0.009	102.958	143.244	8.164	76.001
	CTS SYSTEM_0000052.LAB	3/6/2020	12:45:16	150.0	0.997	0.377	13.458	0.013	103.178	102.187	8.477	75.565
	CTS SYSTEM_0000053.LAB	3/6/2020	12:45:31	149.9	0.998	0.363	11.395	0.011	103.134	97.120	8.516	75.494
	CTS SYSTEM_0000054.LAB	3/6/2020	12:45:46	149.9	0.997	0.354	11.477	0.011	103.225	93.192	8.164	75.406
	CTS SYSTEM_0000055.LAB	3/6/2020	12:46:01	150.0	0.997	0.364	12.051	0.012	103.254	89.634	8.203	75.372
	CTS SYSTEM_0000056.LAB	3/6/2020	12:46:15	149.9	0.997	0.357	12.388	0.012	103.267	88.013	8.555	75.345
	CTS SYSTEM_0000057.LAB	3/6/2020	12:46:30	149.9	0.997	0.345	11.716	0.012	103.244	85.253	8.320	75.284
Pre CTS System Ave						0.375	11.308	0.011	103.137	107.434	8.364	75.576
	ZERO DIRECT_0000058.LAB	3/6/2020	12:47:40	149.9	0.997	0.949	22.894	0.023	25.979	10576.362	8.242	75.116
	ZERO DIRECT_0000059.LAB	3/6/2020	12:48:39	149.8	0.997	1.097	8.438	0.008	16.982	11502.342	8.203	75.110
	ZERO DIRECT_0000060.LAB	3/6/2020	12:49:38	149.9	0.997	1.091	12.658	0.013	16.808	11765.499	8.477	75.339
	ZERO DIRECT_0000001.LAB	3/6/2020	12:51:33	151.6	0.997	0.281	11.605	0.012	0.697	-751.773	8.438	76.404
	ZERO DIRECT_0000002.LAB	3/6/2020	12:53:03	150.0	0.997	-0.033	2.534	0.003	-0.531	65.820	8.555	75.729
	ZERO DIRECT_0000003.LAB	3/6/2020	12:54:02	149.9	0.998	-0.062	0.441	0.000	-0.506	-79.004	8.516	75.497
	FILTER SPECTRUM_0000004.LAB	3/6/2020	12:55:01	149.8	0.997	-0.088	-0.453	0.000	-0.663	-59.896	8.359	75.345
	UNSPIKED SAMPLE 1_0000005.LAB	3/6/2020	12:56:00	149.8	0.998	-0.092	3.252	0.003	-0.626	-154.327	8.242	75.244
	UNSPIKED SAMPLE 1_0000006.LAB	3/6/2020	12:56:59	149.8	0.997	-0.120	20.858	0.021	-0.650	-360.317	8.320	75.146
	UNSPIKED SAMPLE 1_0000007.LAB	3/6/2020	12:57:57	149.7	0.998	-0.135	23.050	0.023	-0.740	-218.662	8.281	75.070
	UNSPIKED SAMPLE 1_0000008.LAB	3/6/2020	12:58:56	149.9	0.998	-0.125	22.441	0.022	-0.617	-420.131	8.594	75.644

Notes	Spectrum	Date	Time	Temp	Pressure	Ethane	Ethylene Oxide		Methane	Water	MAX.MKS.LASERPP	Stack Temp
			CST	°C	Atm	ppm	ppb	ppm	ppm	ppm	Volts	°F
	UNSPIKED SAMPLE 1_0000009.LAB	3/6/2020	12:59:55	150.5	0.998	-0.122	23.746	0.024	-0.591	-300.520	8.555	76.563
Sample 1 Ave						-0.127	23.079	0.023	-0.649	-313.104	8.477	75.759
	UNSPIKED SAMPLE 2_0000010.LAB	3/6/2020	13:00:54	150.2	0.997	-0.129	23.536	0.024	-0.792	-185.285	8.398	76.251
	UNSPIKED SAMPLE 2_0000011.LAB	3/6/2020	13:01:53	150.1	0.998	-0.134	23.825	0.024	-0.747	-267.955	8.633	75.745
	UNSPIKED SAMPLE 2_0000012.LAB	3/6/2020	13:02:52	149.9	0.998	-0.145	21.347	0.021	-0.796	-309.890	8.320	75.494
	UNSPIKED SAMPLE 2_0000013.LAB	3/6/2020	13:03:51	149.8	0.998	-0.145	19.596	0.020	-0.707	-350.674	8.555	75.345
	UNSPIKED SAMPLE 2_0000014.LAB	3/6/2020	13:04:50	149.8	0.998	-0.153	19.624	0.020	-0.776	-345.496	8.633	75.259
Sample 2 Ave						-0.148	20.189	0.020	-0.760	-335.353	8.503	75.366
	SPIKED SAMPLE 1_0000015.LAB	3/6/2020	13:05:48	149.7	0.998	-0.155	19.985	0.020	-0.834	-299.427	8.164	75.269
	SPIKED SAMPLE 1_0000016.LAB	3/6/2020	13:06:47	149.6	0.998	3.290	31.779	0.032	1.691	-1216.456	8.438	75.540
	SPIKED SAMPLE 1_0000017.LAB	3/6/2020	13:07:46	150.1	0.998	34.379	151.915	0.152	1.085	1016.516	8.398	76.541
	SPIKED SAMPLE 1_0000018.LAB	3/6/2020	13:08:45	150.2	0.998	37.730	168.597	0.169	0.857	1305.097	8.320	76.654
	SPIKED SAMPLE 1_0000019.LAB	3/6/2020	13:09:44	149.8	0.998	37.838	169.120	0.169	0.935	1316.954	8.555	76.261
	SPIKED SAMPLE 1_0000020.LAB	3/6/2020	13:10:43	149.7	0.997	37.922	168.386	0.168	0.928	1215.534	8.438	75.879
Spike 1 Ave						37.830	168.701	0.169	0.907	1279.195	8.438	76.265
	SPIKED SAMPLE 2_0000021.LAB	3/6/2020	13:11:42	149.7	0.997	37.955	169.639	0.170	1.015	1141.855	8.242	75.662
	SPIKED SAMPLE 2_0000022.LAB	3/6/2020	13:12:41	149.7	0.998	37.965	168.696	0.169	1.066	1102.407	8.320	75.577
	SPIKED SAMPLE 2_0000023.LAB	3/6/2020	13:13:40	149.7	0.997	37.985	168.718	0.169	1.029	1103.662	8.398	75.604
	SPIKED SAMPLE 2_0000024.LAB	3/6/2020	13:14:38	150.2	0.997	38.005	169.893	0.170	0.973	1256.445	8.438	76.523
	SPIKED SAMPLE 2_0000025.LAB	3/6/2020	13:15:37	150.5	0.998	37.952	170.465	0.170	0.877	1401.977	8.516	76.813
Spike 2 Ave						37.981	169.692	0.170	0.960	1254.028	8.451	76.313
	UNSPIKED SAMPLE 3_0000026.LAB	3/6/2020	13:16:36	150.1	0.998	9.180	59.681	0.060	-0.345	196.711	8.398	76.270
	UNSPIKED SAMPLE 3_0000027.LAB	3/6/2020	13:17:35	150.0	0.998	0.173	17.959	0.018	-0.903	-217.391	8.281	75.870
	UNSPIKED SAMPLE 3_0000028.LAB	3/6/2020	13:18:34	149.9	0.998	0.034	16.496	0.016	-0.799	-298.613	8.281	75.580
	UNSPIKED SAMPLE 3_0000029.LAB	3/6/2020	13:19:33	149.9	0.998	-0.037	16.839	0.017	-0.856	-196.340	8.125	75.357
	UNSPIKED SAMPLE 3_0000030.LAB	3/6/2020	13:20:32	149.9	0.998	-0.069	16.826	0.017	-0.821	-168.286	8.477	75.177
	UNSPIKED SAMPLE 4_0000031.LAB	3/6/2020	13:21:31	149.9	0.997	-0.079	16.698	0.017	-0.805	-294.702	8.633	75.693
	UNSPIKED SAMPLE 4_0000032.LAB	3/6/2020	13:22:30	150.4	0.998	-0.084	29.377	0.029	-0.776	-325.014	8.477	76.642
	UNSPIKED SAMPLE 4_0000033.LAB	3/6/2020	13:23:28	150.3	0.998	-0.070	94.202	0.094	-0.753	-318.559	8.477	76.587
	UNSPIKED SAMPLE 4_0000034.LAB	3/6/2020	13:24:27	150.0	0.998	-0.082	109.686	0.110	-0.716	-366.573	8.438	76.059
	UNSPIKED SAMPLE 4_0000035.LAB	3/6/2020	13:25:26	150.0	0.997	-0.082	125.020	0.125	-0.753	-364.768	8.516	75.650
	SPIKED SAMPLE 3_0000036.LAB	3/6/2020	13:26:25	149.9	0.998	18.151	212.651	0.213	0.146	306.146	8.594	75.427
	SPIKED SAMPLE 3_0000037.LAB	3/6/2020	13:27:24	149.8	0.997	37.585	268.109	0.268	1.003	1122.858	8.320	75.314

Notes	Spectrum	Date	Time	Temp	Pressure	Ethane	Ethylene Oxide		Methane	Water	MAX.MKS.LASERPP	Stack Temp
			CST	°C	Atm	ppm	ppb	ppm	ppm	ppm	Volts	°F
	SPIKED SAMPLE 3_0000038.LAB	3/6/2020	13:28:23	149.9	0.998	38.134	288.042	0.288	1.138	1046.221	8.281	75.247
	SPIKED SAMPLE 3_0000039.LAB	3/6/2020	13:29:22	149.9	0.998	38.149	295.786	0.296	1.083	1128.970	8.320	75.473
	SPIKED SAMPLE 3_0000040.LAB	3/6/2020	13:30:21	150.4	0.998	38.169	300.039	0.300	1.136	1146.123	8.672	76.410
	SPIKED SAMPLE 4_0000041.LAB	3/6/2020	13:31:20	150.5	0.998	38.096	290.955	0.291	1.047	1272.331	8.555	76.456
	SPIKED SAMPLE 4_0000042.LAB	3/6/2020	13:32:18	150.1	0.998	38.132	307.043	0.307	1.019	1176.274	8.555	75.946
	SPIKED SAMPLE 4_0000043.LAB	3/6/2020	13:33:17	150.0	0.998	38.180	316.338	0.316	0.999	1187.249	8.516	75.607
	SPIKED SAMPLE 4_0000044.LAB	3/6/2020	13:34:16	150.0	0.998	38.225	318.908	0.319	1.134	1094.261	8.438	75.415
	SPIKED SAMPLE 4_0000045.LAB	3/6/2020	13:35:15	149.9	0.998	38.226	300.556	0.301	1.061	1118.175	8.438	75.259
	UNSPIKED SAMPLE 5_0000046.LAB	3/6/2020	13:36:14	149.8	0.998	23.719	232.538	0.233	0.491	662.868	8.438	75.198
	UNSPIKED SAMPLE 5_0000047.LAB	3/6/2020	13:37:13	149.8	0.997	0.426	130.836	0.131	-0.644	-352.178	8.477	75.522
	ZERO DIRECT_0000048.LAB	3/6/2020	13:38:12	150.5	0.998	0.351	75.151	0.075	-1.645	-485.329	8.281	76.493
	ZERO DIRECT_0000049.LAB	3/6/2020	13:39:11	150.5	0.997	0.051	1.125	0.001	-0.063	142.951	8.164	76.523
	ZERO DIRECT_0000050.LAB	3/6/2020	13:40:09	150.2	0.998	0.000	0.000	0.000	0.000	0.000	8.281	76.004
	UNSPIKED SAMPLE 3_0000051.LAB	3/6/2020	13:41:26	150.0	0.998	0.022	114.522	0.115	-0.699	-306.718	8.633	75.555
	UNSPIKED SAMPLE 3_0000052.LAB	3/6/2020	13:42:25	150.0	0.998	0.056	151.385	0.151	-0.684	-459.907	8.438	75.372
	UNSPIKED SAMPLE 3_0000053.LAB	3/6/2020	13:43:24	149.8	0.998	-0.004	150.201	0.150	-0.748	-310.302	8.438	75.232
	UNSPIKED SAMPLE 3_0000054.LAB	3/6/2020	13:44:23	149.9	0.998	-0.033	151.657	0.152	-0.699	-339.848	8.242	75.198
	UNSPIKED SAMPLE 3_0000055.LAB	3/6/2020	13:45:22	149.9	0.998	-0.046	182.187	0.182	-0.756	-369.337	8.398	75.589
	UNSPIKED SAMPLE 4_0000056.LAB	3/6/2020	13:46:21	150.5	0.998	-0.043	197.175	0.197	-0.803	-356.956	8.320	76.502
	UNSPIKED SAMPLE 4_0000057.LAB	3/6/2020	13:47:20	150.5	0.998	-0.057	209.061	0.209	-0.811	-267.717	8.242	76.480
	UNSPIKED SAMPLE 4_0000058.LAB	3/6/2020	13:48:18	150.1	0.998	-0.056	225.503	0.226	-0.745	-447.692	8.555	76.016
	UNSPIKED SAMPLE 4_0000059.LAB	3/6/2020	13:49:17	150.0	0.998	-0.067	235.427	0.235	-0.808	-331.628	8.594	75.675
	UNSPIKED SAMPLE 4_0000060.LAB	3/6/2020	13:50:16	150.0	0.998	-0.078	238.100	0.238	-0.904	-372.808	8.555	75.522
	SPIKED SAMPLE 3_0000061.LAB	3/6/2020	13:51:15	151.3	0.999	-0.054	243.737	0.244	-0.768	-357.302	8.320	75.418
	UNSPIKED SAMPLE 3_0000062.LAB	3/6/2020	13:52:14	151.2	0.998	2.845	256.363	0.256	-0.752	12.317	8.359	75.485
	UNSPIKED SAMPLE 3_0000063.LAB	3/6/2020	13:53:13	150.1	0.999	0.139	214.057	0.214	-0.850	-254.987	8.281	75.491
	UNSPIKED SAMPLE 3_0000064.LAB	3/6/2020	13:54:12	149.9	0.998	0.455	190.735	0.191	-0.852	-281.563	8.516	75.607
	UNSPIKED SAMPLE 3_0000065.LAB	3/6/2020	13:55:11	150.3	0.998	0.140	174.220	0.174	-0.850	-294.808	8.359	76.517
	UNSPIKED SAMPLE 3_0000066.LAB	3/6/2020	13:56:10	150.5	0.998	0.038	157.647	0.158	-0.720	-324.314	8.398	76.786
	UNSPIKED SAMPLE 3_0000067.LAB	3/6/2020	13:57:08	150.1	0.998	-0.039	144.934	0.145	-0.945	-205.350	8.203	76.297
	UNSPIKED SAMPLE 3_0000068.LAB	3/6/2020	13:58:07	150.0	0.998	-0.061	136.906	0.137	-0.900	-271.371	8.789	75.842
	UNSPIKED SAMPLE 3_0000069.LAB	3/6/2020	13:59:06	150.0	0.998	-0.072	123.578	0.124	-0.878	-275.707	8.438	75.571
	UNSPIKED SAMPLE 3_0000070.LAB	3/6/2020	14:00:05	149.8	0.998	-0.080	117.282	0.117	-0.742	-329.255	8.555	75.443
	UNSPIKED SAMPLE 3_0000071.LAB	3/6/2020	14:01:04	149.8	0.998	-0.089	110.592	0.111	-0.771	-316.861	8.398	75.339
	UNSPIKED SAMPLE 3_0000072.LAB	3/6/2020	14:02:03	149.8	0.998	-0.106	101.105	0.101	-0.806	-217.361	8.516	75.351
	UNSPIKED SAMPLE 3_0000073.LAB	3/6/2020	14:03:02	150.8	0.998	-0.116	95.473	0.095	-0.832	-168.414	8.398	75.311
	UNSPIKED SAMPLE 3_0000074.LAB	3/6/2020	14:04:01	151.6	0.998	-0.097	92.570	0.093	-0.714	-77.541	8.516	75.290

Notes	Spectrum	Date	Time	Temp	Pressure	Ethane	Ethylene Oxide		Methane	Water	MAX.MKS.LASERPP	Stack Temp
			CST	°C	Atm	ppm	ppb	ppm	ppm	ppm	Volts	°F
	UNSPIKED SAMPLE 4_0000075.LAB	3/6/2020	14:05:00	151.2	0.998	-0.117	88.960	0.089	-0.808	-3.703	8.242	75.308
	UNSPIKED SAMPLE 3_0000076.LAB	3/6/2020	14:05:58	150.1	0.998	-0.124	79.764	0.080	-0.848	-139.529	8.398	75.229
	UNSPIKED SAMPLE 3_0000077.LAB	3/6/2020	14:06:57	149.9	0.998	-0.123	75.426	0.075	-0.826	-265.610	8.438	75.665
	UNSPIKED SAMPLE 3_0000078.LAB	3/6/2020	14:07:56	150.4	0.998	-0.115	72.080	0.072	-0.735	-275.933	8.359	76.624
	UNSPIKED SAMPLE 3_0000079.LAB	3/6/2020	14:08:55	150.4	0.998	-0.123	69.765	0.070	-0.844	-165.766	8.281	76.523
	UNSPIKED SAMPLE 3_0000080.LAB	3/6/2020	14:09:54	150.0	0.999	-0.136	63.523	0.064	-0.889	-201.749	8.398	76.148
	UNSPIKED SAMPLE 3_0000081.LAB	3/6/2020	14:10:53	150.0	0.999	-0.107	59.851	0.060	-0.861	-222.302	8.359	75.836
	UNSPIKED SAMPLE 3_0000082.LAB	3/6/2020	14:11:52	149.9	0.999	-0.105	56.554	0.057	-0.934	-277.182	8.320	75.699
	UNSPIKED SAMPLE 3_0000083.LAB	3/6/2020	14:12:51	149.8	0.998	-0.074	54.273	0.054	-0.893	-256.761	8.359	75.638
	UNSPIKED SAMPLE 3_0000084.LAB	3/6/2020	14:13:50	149.8	0.998	0.022	51.855	0.052	-0.898	-346.523	8.203	75.604
	UNSPIKED SAMPLE 3_0000085.LAB	3/6/2020	14:14:49	149.8	0.998	-0.032	50.104	0.050	-0.905	-314.276	8.398	75.613
	UNSPIKED SAMPLE 3_0000086.LAB	3/6/2020	14:15:47	149.8	0.998	-0.063	47.821	0.048	-0.899	-293.774	8.711	75.586
	UNSPIKED SAMPLE 3_0000087.LAB	3/6/2020	14:16:46	149.8	0.998	-0.091	45.295	0.045	-0.958	-286.886	8.711	75.684
	UNSPIKED SAMPLE 4_0000088.LAB	3/6/2020	14:17:45	150.4	0.998	-0.108	43.139	0.043	-1.056	-205.582	8.516	76.706
	UNSPIKED SAMPLE 4_0000089.LAB	3/6/2020	14:18:44	150.7	0.999	-0.127	42.931	0.043	-1.037	-44.048	8.398	77.008
	UNSPIKED SAMPLE 3_0000090.LAB	3/6/2020	14:19:43	150.3	0.998	-0.145	42.740	0.043	-1.052	-31.240	8.398	76.483
	UNSPIKED SAMPLE 3_0000091.LAB	3/6/2020	14:20:42	150.1	0.998	-0.151	41.204	0.041	-1.039	-59.498	8.672	76.108
	UNSPIKED SAMPLE 3_0000092.LAB	3/6/2020	14:21:41	150.0	0.999	-0.144	38.723	0.039	-1.014	-131.660	8.594	75.842
	UNSPIKED SAMPLE 3_0000093.LAB	3/6/2020	14:22:40	150.0	0.998	-0.151	37.321	0.037	-1.021	-108.700	8.359	75.800
	UNSPIKED SAMPLE 3_0000094.LAB	3/6/2020	14:23:38	149.9	0.999	-0.164	35.776	0.036	-1.047	-99.863	8.477	75.806
	ZERO DIRECT_0000095.LAB	3/6/2020	14:24:37	150.0	0.997	-0.157	36.234	0.036	-1.063	-124.598	8.398	75.772
	ZERO DIRECT_0000096.LAB	3/6/2020	14:25:36	149.9	0.998	-0.182	3.521	0.004	-1.521	-61.181	8.711	75.742
	ZERO DIRECT_0000097.LAB	3/6/2020	14:26:35	149.9	0.998	-0.067	1.572	0.002	-0.074	114.513	8.555	75.681
	ZERO DIRECT_0000001.LAB	3/6/2020	14:27:53	150.4	0.998	0.013	0.974	0.001	0.283	37.611	8.398	76.825
	FILTER SPECTRUM_0000002.LAB	3/6/2020	14:28:51	150.7	0.998	0.000	0.000	0.000	0.000	0.000	8.320	77.085
	UNSPIKED SAMPLE 3_0000003.LAB	3/6/2020	14:30:00	150.3	0.998	6.926	55.627	0.056	0.201	44.517	8.594	76.508
	UNSPIKED SAMPLE 3_0000004.LAB	3/6/2020	14:30:59	150.1	0.998	0.265	28.388	0.028	-0.042	-252.492	8.438	76.132
	UNSPIKED SAMPLE 3_0000005.LAB	3/6/2020	14:32:27	150.0	0.998	0.119	26.063	0.026	-0.109	-273.890	8.633	75.824
	UNSPIKED SAMPLE 3_0000006.LAB	3/6/2020	14:33:26	149.9	0.998	0.055	26.178	0.026	-0.122	-232.297	8.438	75.699
Sample 3 Ave						0.146	26.877	0.027	-0.091	-252.893	8.503	75.885
	UNSPIKED SAMPLE 4_0000007.LAB	3/6/2020	14:34:25	149.9	0.998	0.030	24.849	0.025	-0.108	-279.306	8.203	75.598
	UNSPIKED SAMPLE 4_0000008.LAB	3/6/2020	14:35:23	150.0	0.998	0.024	24.678	0.025	-0.053	-263.516	8.633	75.507
	UNSPIKED SAMPLE 4_0000009.LAB	3/6/2020	14:36:22	150.0	0.999	-0.005	23.399	0.023	-0.166	-123.357	8.594	75.427
	UNSPIKED SAMPLE 4_0000010.LAB	3/6/2020	14:37:21	150.0	0.998	-0.011	22.938	0.023	-0.146	-242.468	8.398	75.546
	UNSPIKED SAMPLE 4_0000011.LAB	3/6/2020	14:38:20	150.4	0.998	-0.012	23.121	0.023	-0.060	-253.016	8.516	76.526
Sample 4 Ave						-0.009	23.153	0.023	-0.124	-206.280	8.503	75.833

Notes	Spectrum	Date	Time CST	Temp °C	Pressure Atm	Ethane ppm	Ethylene Oxide ppb	Ethylene Oxide ppm	Methane ppm	Water ppm	MAX.MKS.LASERPP Volts	Stack Temp °F
	SPIKED SAMPLE 3_0000012.LAB	3/6/2020	14:39:19	150.7	0.999	-0.014	24.503	0.025	-0.108	-186.812	8.320	76.896
	SPIKED SAMPLE 3_0000013.LAB	3/6/2020	14:40:18	150.3	0.999	27.429	123.581	0.124	1.557	743.858	8.438	76.404
	SPIKED SAMPLE 3_0000014.LAB	3/6/2020	14:41:17	150.1	0.998	36.335	162.814	0.163	1.718	1140.211	8.477	76.059
	SPIKED SAMPLE 3_0000015.LAB	3/6/2020	14:42:16	150.0	0.999	38.094	172.920	0.173	1.599	1218.156	8.438	75.842
	SPIKED SAMPLE 3_0000016.LAB	3/6/2020	14:43:15	150.0	0.998	38.165	172.480	0.172	1.566	1251.595	8.711	75.711
	SPIKED SAMPLE 3_0000017.LAB	3/6/2020	14:44:13	150.0	0.998	38.167	170.669	0.171	1.587	1266.539	8.672	75.644
Spike 3 Ave						38.142	172.023	0.172	1.584	1245.430	8.607	75.733
	SPIKED SAMPLE 4_0000018.LAB	3/6/2020	14:45:12	149.9	0.998	38.198	170.763	0.171	1.621	1289.190	8.594	75.653
	SPIKED SAMPLE 4_0000019.LAB	3/6/2020	14:46:11	150.0	0.998	38.233	171.978	0.172	1.728	1217.524	8.438	75.623
	SPIKED SAMPLE 4_0000020.LAB	3/6/2020	14:47:10	149.9	0.998	38.218	169.528	0.170	1.571	1241.408	8.359	75.613
	SPIKED SAMPLE 4_0000021.LAB	3/6/2020	14:48:09	150.1	0.998	38.224	168.944	0.169	1.712	1206.213	8.594	76.200
	SPIKED SAMPLE 4_0000022.LAB	3/6/2020	14:49:08	150.8	0.998	38.210	171.369	0.171	1.537	1300.845	8.203	77.024
Spike 4 Ave						38.217	169.947	0.170	1.607	1249.489	8.385	76.279
	UNSPIKED SAMPLE 5_0000023.LAB	3/6/2020	14:50:07	150.5	0.998	10.022	61.829	0.062	0.251	337.773	8.359	76.679
	UNSPIKED SAMPLE 5_0000024.LAB	3/6/2020	14:51:06	150.3	0.998	0.329	17.313	0.017	-0.155	-197.409	8.359	76.300
	UNSPIKED SAMPLE 5_0000025.LAB	3/6/2020	14:52:05	150.1	0.998	0.165	17.750	0.018	-0.109	-188.998	8.438	76.001
	UNSPIKED SAMPLE 5_0000026.LAB	3/6/2020	14:53:03	150.0	0.998	0.086	14.248	0.014	-0.186	-190.230	8.633	75.885
	UNSPIKED SAMPLE 5_0000027.LAB	3/6/2020	14:54:02	150.0	0.998	0.051	15.496	0.015	-0.214	-228.773	8.438	75.732
Sample 5 Ave						0.101	15.831	0.016	-0.170	-202.667	8.503	75.873
	UNSPIKED SAMPLE 6_0000028.LAB	3/6/2020	14:55:01	150.0	0.998	0.031	13.727	0.014	-0.186	-234.768	8.633	75.720
	UNSPIKED SAMPLE 6_0000029.LAB	3/6/2020	14:56:00	150.0	0.998	0.012	12.988	0.013	-0.217	-223.413	8.320	75.601
	UNSPIKED SAMPLE 6_0000030.LAB	3/6/2020	14:56:59	149.9	0.999	0.009	14.499	0.014	-0.126	-263.461	8.438	75.598
	UNSPIKED SAMPLE 6_0000031.LAB	3/6/2020	14:57:58	149.9	0.998	-0.010	13.440	0.013	-0.216	-208.729	8.242	75.791
	UNSPIKED SAMPLE 6_0000032.LAB	3/6/2020	14:58:57	150.5	0.998	-0.007	12.864	0.013	-0.113	-289.562	8.438	76.844
Sample 6 Ave						-0.003	13.601	0.014	-0.152	-253.917	8.372	76.077
	SPIKED SAMPLE 5_0000033.LAB	3/6/2020	14:59:56	150.8	0.999	16.775	85.081	0.085	0.770	345.839	8.320	77.039
	SPIKED SAMPLE 5_0000034.LAB	3/6/2020	15:00:54	150.3	0.999	37.964	165.918	0.166	1.678	1167.163	8.203	76.651
	SPIKED SAMPLE 5_0000035.LAB	3/6/2020	15:01:53	150.1	0.999	38.279	165.993	0.166	1.744	1154.074	8.203	76.325
	SPIKED SAMPLE 5_0000036.LAB	3/6/2020	15:02:52	150.1	0.998	38.347	165.936	0.166	1.824	1167.917	8.398	76.123
	SPIKED SAMPLE 5_0000037.LAB	3/6/2020	15:03:51	150.0	0.998	38.371	167.147	0.167	1.839	1014.330	8.359	75.888
Spike 5 Ave						38.333	166.359	0.166	1.802	1112.107	8.320	76.112

Notes	Spectrum	Date	Time	Temp	Pressure	Ethane	Ethylene Oxide		Methane	Water	MAX.MKS.LASERPP	Stack Temp
			CST	°C	Atm	ppm	ppb	ppm	ppm	ppm	Volts	°F
	SPIKED SAMPLE 6_0000038.LAB	3/6/2020	15:04:50	150.0	0.998	38.411	167.470	0.167	1.947	982.417	8.398	75.882
	SPIKED SAMPLE 6_0000039.LAB	3/6/2020	15:05:49	150.1	0.998	38.360	166.431	0.166	1.712	1133.749	8.438	75.922
	SPIKED SAMPLE 6_0000040.LAB	3/6/2020	15:06:48	150.0	0.999	38.326	166.852	0.167	1.560	1237.380	8.125	75.852
	SPIKED SAMPLE 6_0000041.LAB	3/6/2020	15:07:47	149.9	0.999	38.360	165.965	0.166	1.643	1129.925	8.281	75.873
	SPIKED SAMPLE 6_0000042.LAB	3/6/2020	15:08:46	150.5	0.999	38.358	166.060	0.166	1.534	1280.234	8.320	76.841
Spike 6 Ave						38.348	166.292	0.166	1.579	1215.846	8.242	76.188
	ZERO DIRECT_0000043.LAB	3/6/2020	15:09:44	150.8	0.999	25.521	121.122	0.121	1.212	783.703	8.555	77.182
	ZERO DIRECT_0000001.LAB	3/6/2020	15:11:08	150.3	0.998	0.241	2.647	0.003	0.032	-28.240	8.516	76.410
	ZERO DIRECT_0000002.LAB	3/6/2020	15:12:07	150.1	0.998	0.115	-0.430	0.000	0.463	131.208	8.516	76.062
	ZERO DIRECT_0000003.LAB	3/6/2020	15:13:06	150.1	0.999	0.042	-0.525	-0.001	0.186	30.532	8.516	75.794
	FILTER SPECTRUM_0000004.LAB	3/6/2020	15:14:05	150.0	0.998	0.000	0.000	0.000	0.000	0.000	8.281	75.650
	UNSPIKED SAMPLE 7_0000005.LAB	3/6/2020	15:15:12	150.0	0.998	7.731	44.978	0.045	0.176	181.533	8.203	75.534
	UNSPIKED SAMPLE 7_0000006.LAB	3/6/2020	15:16:11	150.0	0.999	0.210	13.844	0.014	-0.185	-101.170	8.672	75.412
	UNSPIKED SAMPLE 7_0000007.LAB	3/6/2020	15:17:30	149.9	0.999	0.039	13.687	0.014	-0.246	-166.380	8.633	75.403
	UNSPIKED SAMPLE 7_0000008.LAB	3/6/2020	15:18:29	150.0	0.998	0.004	12.421	0.012	-0.159	-243.621	8.203	75.507
	UNSPIKED SAMPLE 7_0000009.LAB	3/6/2020	15:19:28	150.4	0.998	-0.031	12.790	0.013	-0.170	-171.751	8.242	76.508
Sample 7 Ave						0.004	12.966	0.013	-0.192	-193.917	8.359	75.806
	UNSPIKED SAMPLE 8_0000010.LAB	3/6/2020	15:20:27	150.7	0.998	-0.055	15.283	0.015	-0.152	-96.726	8.398	76.764
	UNSPIKED SAMPLE 8_0000011.LAB	3/6/2020	15:21:25	150.3	0.999	-0.060	13.454	0.013	-0.222	-112.788	8.672	76.248
	UNSPIKED SAMPLE 8_0000012.LAB	3/6/2020	15:22:24	150.1	0.998	-0.087	12.030	0.012	-0.304	-138.832	8.672	75.900
	UNSPIKED SAMPLE 8_0000013.LAB	3/6/2020	15:23:23	150.0	0.999	-0.085	11.615	0.012	-0.317	-134.310	8.594	75.662
	UNSPIKED SAMPLE 8_0000014.LAB	3/6/2020	15:24:22	150.0	0.998	-0.099	10.505	0.011	-0.280	-208.412	8.594	75.510
Sample 8 Ave						-0.090	11.384	0.011	-0.300	-160.518	8.620	75.691
	SPIKED SAMPLE 7_0000015.LAB	3/6/2020	15:25:21	150.0	0.999	22.673	106.525	0.107	0.884	738.008	8.438	75.436
	SPIKED SAMPLE 7_0000016.LAB	3/6/2020	15:26:20	149.9	0.998	34.191	147.852	0.148	1.626	1126.226	8.398	75.424
	SPIKED SAMPLE 7_0000017.LAB	3/6/2020	15:27:19	150.0	0.998	38.185	164.846	0.165	1.499	1232.718	8.516	75.391
	SPIKED SAMPLE 7_0000018.LAB	3/6/2020	15:28:18	150.0	0.999	38.196	163.522	0.164	1.432	1266.186	8.750	75.406
	SPIKED SAMPLE 7_0000019.LAB	3/6/2020	15:29:16	150.0	0.999	38.239	162.533	0.163	1.466	1278.349	8.789	75.568
Spike 7 Ave						38.206	163.634	0.164	1.466	1259.084	8.685	75.455
	SPIKED SAMPLE 8_0000020.LAB	3/6/2020	15:30:15	150.4	0.999	38.182	163.837	0.164	1.325	1396.651	8.711	76.535
	SPIKED SAMPLE 8_0000021.LAB	3/6/2020	15:31:14	150.8	0.998	38.190	163.758	0.164	1.483	1385.147	8.516	76.889
	SPIKED SAMPLE 8_0000022.LAB	3/6/2020	15:32:13	150.3	0.999	38.168	168.049	0.168	1.396	1343.731	8.828	76.490
	SPIKED SAMPLE 8_0000023.LAB	3/6/2020	15:33:12	150.2	0.999	38.210	174.190	0.174	1.428	1316.584	8.516	76.047

Notes	Spectrum	Date	Time	Temp	Pressure	Ethane	Ethylene Oxide		Methane	Water	MAX.MKS.LASERPP	Stack Temp
			CST	°C	Atm	ppm	ppb	ppm	ppm	ppm	Volts	°F
	SPIKED SAMPLE 8_0000024.LAB	3/6/2020	15:34:11	150.1	0.999	38.225	183.427	0.183	1.368	1312.091	8.711	75.839
Spike 8 Ave						38.201	175.222	0.175	1.398	1324.135	8.685	76.125
	UNSPIKED SAMPLE 9_0000025.LAB	3/6/2020	15:35:10	150.0	0.999	17.851	103.071	0.103	0.541	485.793	8.398	75.671
	UNSPIKED SAMPLE 9_0000026.LAB	3/6/2020	15:36:09	150.1	0.999	0.300	24.774	0.025	-0.427	-248.481	8.242	75.555
	UNSPIKED SAMPLE 9_0000027.LAB	3/6/2020	15:37:07	150.0	0.999	0.088	22.991	0.023	-0.416	-248.697	8.203	75.555
	UNSPIKED SAMPLE 9_0000028.LAB	3/6/2020	15:38:06	150.0	0.999	0.015	20.157	0.020	-0.340	-326.544	8.438	75.491
	UNSPIKED SAMPLE 9_0000029.LAB	3/6/2020	15:39:05	150.0	0.999	-0.030	17.820	0.018	-0.381	-268.008	8.594	75.458
	UNSPIKED SAMPLE 10_0000030.LAB	3/6/2020	15:40:04	150.0	0.999	-0.057	16.977	0.017	-0.436	-344.050	8.594	75.821
	UNSPIKED SAMPLE 10_0000031.LAB	3/6/2020	15:41:03	150.5	0.999	-0.062	17.660	0.018	-0.329	-306.252	8.711	76.776
	UNSPIKED SAMPLE 10_0000032.LAB	3/6/2020	15:42:02	150.7	0.999	-0.074	16.037	0.016	-0.433	-266.684	8.477	76.834
	UNSPIKED SAMPLE 10_0000033.LAB	3/6/2020	15:43:01	150.2	0.999	-0.088	12.760	0.013	-0.456	-291.643	8.438	76.438
	UNSPIKED SAMPLE 10_0000034.LAB	3/6/2020	15:44:00	150.2	0.999	-0.092	12.301	0.012	-0.414	-328.652	8.516	76.007
	SPIKED SAMPLE 9_0000035.LAB	3/6/2020	15:44:58	150.0	0.999	9.597	55.256	0.055	-0.020	112.887	8.516	75.815
	SPIKED SAMPLE 9_0000036.LAB	3/6/2020	15:45:57	150.0	0.999	37.903	160.465	0.160	1.306	1208.247	8.750	75.699
	SPIKED SAMPLE 9_0000037.LAB	3/6/2020	15:46:56	150.0	0.999	38.246	164.871	0.165	1.285	1249.872	8.594	75.656
	SPIKED SAMPLE 9_0000038.LAB	3/6/2020	15:47:55	150.0	0.999	38.237	164.811	0.165	1.288	1258.571	8.594	75.629
	SPIKED SAMPLE 9_0000039.LAB	3/6/2020	15:48:54	149.9	0.999	38.246	164.201	0.164	1.339	1237.022	8.516	75.562
	SPIKED SAMPLE 10_0000040.LAB	3/6/2020	15:49:53	149.9	0.999	38.289	163.774	0.164	1.320	1215.753	8.633	75.549
	SPIKED SAMPLE 10_0000041.LAB	3/6/2020	15:50:52	150.1	0.998	38.340	179.061	0.179	1.292	1208.279	8.594	76.035
	SPIKED SAMPLE 10_0000042.LAB	3/6/2020	15:51:51	150.8	0.999	38.251	182.338	0.182	1.200	1333.272	8.555	76.911
	SPIKED SAMPLE 10_0000043.LAB	3/6/2020	15:52:50	150.5	0.999	38.195	175.219	0.175	1.218	1344.692	8.203	76.694
	SPIKED SAMPLE 10_0000044.LAB	3/6/2020	15:53:48	150.2	0.999	38.270	172.944	0.173	1.340	1242.257	8.398	76.248
	UNSPIKED SAMPLE 11_0000045.LAB	3/6/2020	15:54:47	150.1	0.999	33.562	151.908	0.152	1.194	981.827	8.320	75.934
	UNSPIKED SAMPLE 11_0000046.LAB	3/6/2020	15:55:46	150.1	0.998	0.711	18.250	0.018	-0.429	-249.797	8.633	75.705
	UNSPIKED SAMPLE 11_0000047.LAB	3/6/2020	15:56:45	150.1	0.999	0.149	13.864	0.014	-0.479	-335.762	8.867	75.613
	UNSPIKED SAMPLE 11_0000048.LAB	3/6/2020	15:57:44	151.0	0.999	0.049	14.594	0.015	-0.365	-330.134	8.594	75.620
	UNSPIKED SAMPLE 11_0000049.LAB	3/6/2020	15:58:43	150.3	0.999	0.008	13.922	0.014	-0.348	-317.360	8.633	75.565
	SPIKED SAMPLE 10_0000050.LAB	3/6/2020	15:59:42	150.1	0.999	-0.030	11.772	0.012	-0.413	-395.482	8.438	75.467
	ZERO DIRECT_0000001.LAB	3/6/2020	16:00:53	150.0	0.999	0.476	-1.459	-0.001	-0.148	-84.879	8.281	75.449
	ZERO DIRECT_0000002.LAB	3/6/2020	16:01:52	150.0	0.999	0.219	-2.161	-0.002	0.712	91.538	8.398	75.443
	ZERO DIRECT_0000003.LAB	3/6/2020	16:02:51	150.0	0.998	0.099	-1.347	-0.001	0.370	7.869	8.281	75.513
	ZERO DIRECT_0000004.LAB	3/6/2020	16:03:50	150.4	0.999	0.022	-1.876	-0.002	0.050	53.608	8.438	76.493
	FILTER SPECTRUM_0000005.LAB	3/6/2020	16:04:48	150.8	0.998	0.000	0.000	0.000	0.000	0.000	8.594	76.822
	EQUILIBRATE EO_0000006.LAB	3/6/2020	16:05:13	150.5	0.992	65.263	322.080	0.322	69.260	3134.445	8.711	76.633
	UNSPIKED SAMPLE 9_0000007.LAB	3/6/2020	16:06:15	150.2	0.999	11.311	60.469	0.060	0.730	79.229	8.320	76.206
	UNSPIKED SAMPLE 9_0000008.LAB	3/6/2020	16:07:57	150.0	0.999	0.099	7.642	0.008	-0.142	-89.624	8.359	75.699

Notes	Spectrum	Date	Time	Temp	Pressure	Ethane	Ethylene Oxide		Methane	Water	MAX.MKS.LASERPP	Stack Temp
			CST	°C	Atm	ppm	ppb	ppm	ppm	ppm	Volts	°F
	UNSPIKED SAMPLE 9_0000009.LAB	3/6/2020	16:08:56	150.0	0.999	0.022	5.505	0.006	-0.133	-115.928	8.828	75.580
	UNSPIKED SAMPLE 9_0000010.LAB	3/6/2020	16:09:54	150.7	0.999	0.006	20.248	0.020	-0.041	-133.867	8.672	75.458
	UNSPIKED SAMPLE 9_0000011.LAB	3/6/2020	16:10:53	150.2	0.999	0.217	34.442	0.034	0.006	-191.738	8.711	75.455
	UNSPIKED SAMPLE 9_0000012.LAB	3/6/2020	16:11:52	150.0	0.999	0.166	41.176	0.041	-0.100	-105.931	8.516	75.369
	UNSPIKED SAMPLE 9_0000013.LAB	3/6/2020	16:12:51	150.1	0.999	0.057	49.848	0.050	-0.065	-186.857	8.438	75.378
	UNSPIKED SAMPLE 9_0000014.LAB	3/6/2020	16:13:50	150.0	0.999	0.025	72.028	0.072	0.043	-316.240	8.438	75.345
	UNSPIKED SAMPLE 9_0000015.LAB	3/6/2020	16:14:49	150.0	0.999	0.000	81.232	0.081	-0.022	-236.638	8.359	75.299
	UNSPIKED SAMPLE 10_0000016.LAB	3/6/2020	16:15:48	150.0	0.999	-0.022	91.778	0.092	-0.039	-158.902	8.281	75.330
	UNSPIKED SAMPLE 10_0000017.LAB	3/6/2020	16:16:47	150.1	0.999	-0.035	112.827	0.113	-0.050	-201.351	8.359	75.900
	UNSPIKED SAMPLE 9_0000018.LAB	3/6/2020	16:17:46	150.7	0.999	-0.012	125.358	0.125	-0.041	-183.501	8.320	76.697
	UNSPIKED SAMPLE 9_0000019.LAB	3/6/2020	16:18:44	150.4	0.999	-0.021	138.677	0.139	-0.077	-139.797	8.320	76.419
	UNSPIKED SAMPLE 9_0000020.LAB	3/6/2020	16:19:43	150.2	0.999	-0.037	145.071	0.145	0.003	-214.705	8.672	75.961
	UNSPIKED SAMPLE 9_0000021.LAB	3/6/2020	16:20:42	150.1	0.999	-0.033	153.081	0.153	-0.031	-231.144	8.711	75.693
	UNSPIKED SAMPLE 9_0000022.LAB	3/6/2020	16:21:41	150.1	0.999	-0.031	167.917	0.168	-0.017	-206.127	8.828	75.534
	UNSPIKED SAMPLE 10_0000023.LAB	3/6/2020	16:22:40	150.0	0.999	-0.034	175.074	0.175	-0.078	-162.475	8.672	75.406
	UNSPIKED SAMPLE 9_0000024.LAB	3/6/2020	16:23:39	150.0	0.999	-0.033	177.358	0.177	-0.071	-188.505	8.555	75.354
	UNSPIKED SAMPLE 9_0000025.LAB	3/6/2020	16:24:38	150.0	0.999	-0.031	173.778	0.174	-0.092	-151.442	8.438	75.320
	UNSPIKED SAMPLE 9_0000026.LAB	3/6/2020	16:25:37	149.9	0.999	-0.037	186.978	0.187	-0.022	-174.836	8.555	75.168
	UNSPIKED SAMPLE 9_0000027.LAB	3/6/2020	16:26:35	150.0	0.999	-0.019	196.161	0.196	0.023	-236.991	8.594	75.174
	UNSPIKED SAMPLE 9_0000028.LAB	3/6/2020	16:27:34	150.0	0.999	-0.036	185.154	0.185	0.061	-193.330	8.516	75.110
	UNSPIKED SAMPLE 9_0000029.LAB	3/6/2020	16:28:33	150.0	0.999	-0.026	176.100	0.176	0.164	-227.030	8.438	75.305
	UNSPIKED SAMPLE 9_0000030.LAB	3/6/2020	16:29:32	150.7	0.999	-0.022	178.658	0.179	0.145	-179.076	8.555	76.276
	UNSPIKED SAMPLE 9_0000031.LAB	3/6/2020	16:30:31	150.7	0.999	-0.009	188.101	0.188	0.123	-170.516	8.398	76.383
	UNSPIKED SAMPLE 9_0000032.LAB	3/6/2020	16:31:30	150.3	0.999	0.016	193.660	0.194	0.185	-239.004	8.633	76.010
	UNSPIKED SAMPLE 9_0000033.LAB	3/6/2020	16:32:29	150.1	0.999	0.006	182.786	0.183	0.185	-242.988	8.711	75.586
	UNSPIKED SAMPLE 9_0000034.LAB	3/6/2020	16:33:28	150.1	0.999	0.018	174.847	0.175	0.254	-211.132	8.320	75.339
	UNSPIKED SAMPLE 9_0000035.LAB	3/6/2020	16:34:27	150.0	1.000	0.005	167.401	0.167	0.241	-158.730	8.555	75.287
	UNSPIKED SAMPLE 10_0000036.LAB	3/6/2020	16:35:25	150.0	0.999	0.011	172.599	0.173	0.270	-275.341	8.359	75.232
	UNSPIKED SAMPLE 10_0000037.LAB	3/6/2020	16:36:24	150.0	0.999	0.008	184.098	0.184	0.268	-283.194	8.672	75.128
	UNSPIKED SAMPLE 10_0000038.LAB	3/6/2020	16:37:23	150.1	0.999	0.007	184.606	0.185	0.275	-242.989	8.594	75.092
	UNSPIKED SAMPLE 10_0000039.LAB	3/6/2020	16:38:22	150.1	0.999	0.007	184.970	0.185	0.267	-251.421	8.594	75.049
	UNSPIKED SAMPLE 10_0000040.LAB	3/6/2020	16:39:21	150.0	0.999	0.007	186.349	0.186	0.287	-247.767	8.633	74.948
	SPIKED SAMPLE 9_0000041.LAB	3/6/2020	16:40:20	149.9	0.999	14.215	234.325	0.234	1.164	255.485	8.477	75.076
	SPIKED SAMPLE 9_0000042.LAB	3/6/2020	16:41:19	150.4	1.000	27.466	278.134	0.278	2.317	548.073	8.477	76.062
	SPIKED SAMPLE 9_0000043.LAB	3/6/2020	16:42:18	150.8	0.999	38.040	308.845	0.309	1.935	1382.173	8.516	76.331
	SPIKED SAMPLE 9_0000044.LAB	3/6/2020	16:43:16	150.3	0.999	38.147	296.476	0.296	2.053	1327.991	8.672	75.809
	SPIKED SAMPLE 9_0000045.LAB	3/6/2020	16:44:15	150.2	1.000	38.165	284.491	0.284	1.977	1315.190	8.477	75.430

Notes	Spectrum	Date	Time	Temp	Pressure	Ethane	Ethylene Oxide		Methane	Water	MAX.MKS.LASERPP	Stack Temp
			CST	°C	Atm	ppm	ppb	ppm	ppm	ppm	Volts	°F
	SPIKED SAMPLE 10_0000046.LAB	3/6/2020	16:45:14	150.1	1.000	38.191	275.888	0.276	1.997	1321.401	8.477	75.250
	SPIKED SAMPLE 10_0000047.LAB	3/6/2020	16:46:13	150.1	0.999	38.206	268.385	0.268	1.941	1369.460	8.477	75.156
	SPIKED SAMPLE 10_0000048.LAB	3/6/2020	16:47:12	150.1	1.000	38.208	259.843	0.260	1.985	1355.957	8.555	75.046
	SPIKED SAMPLE 10_0000049.LAB	3/6/2020	16:48:11	150.1	0.999	38.215	253.552	0.254	2.029	1361.326	8.711	74.963
	SPIKED SAMPLE 10_0000050.LAB	3/6/2020	16:49:10	149.9	1.000	38.213	246.549	0.247	2.117	1275.696	8.633	74.975
	UNSPIKED SAMPLE 11_0000051.LAB	3/6/2020	16:50:09	150.0	0.999	24.843	195.142	0.195	1.552	902.959	8.398	74.890
	UNSPIKED SAMPLE 11_0000052.LAB	3/6/2020	16:51:08	150.0	1.000	0.489	92.240	0.092	0.264	1.391	8.242	74.917
	UNSPIKED SAMPLE 11_0000053.LAB	3/6/2020	16:52:06	150.0	1.000	0.179	88.694	0.089	0.256	-77.540	8.398	75.183
	UNSPIKED SAMPLE 11_0000054.LAB	3/6/2020	16:53:05	150.5	1.000	0.099	83.699	0.084	0.366	-24.038	8.398	76.105
	UNSPIKED SAMPLE 11_0000055.LAB	3/6/2020	16:54:04	150.7	1.000	0.065	79.676	0.080	0.263	-13.395	8.711	76.169
	UNSPIKED SAMPLE 12_0000056.LAB	3/6/2020	16:55:03	150.3	1.000	0.054	75.897	0.076	0.385	-68.509	8.555	75.671
	UNSPIKED SAMPLE 12_0000057.LAB	3/6/2020	16:56:02	150.2	0.999	0.038	71.745	0.072	0.466	-195.982	8.594	75.391
	UNSPIKED SAMPLE 12_0000058.LAB	3/6/2020	16:57:01	150.1	0.999	0.035	66.956	0.067	0.455	-245.333	8.438	75.131
	UNSPIKED SAMPLE 12_0000059.LAB	3/6/2020	16:58:00	150.1	0.999	-0.007	65.209	0.065	0.343	-109.058	8.438	75.067
	UNSPIKED SAMPLE 12_0000060.LAB	3/6/2020	16:58:59	150.1	0.999	-0.002	61.829	0.062	0.431	-156.757	8.477	74.994
	SPIKED SAMPLE 11_0000061.LAB	3/6/2020	16:59:57	150.1	1.000	3.489	73.963	0.074	0.615	-129.852	8.438	74.960
	SPIKED SAMPLE 11_0000062.LAB	3/6/2020	17:00:56	150.1	1.000	37.807	201.889	0.202	2.128	1183.103	8.203	74.963
	SPIKED SAMPLE 11_0000063.LAB	3/6/2020	17:01:55	150.0	0.999	38.268	204.233	0.204	2.260	1251.431	8.164	74.939
	SPIKED SAMPLE 11_0000064.LAB	3/6/2020	17:02:54	150.2	0.999	38.322	202.117	0.202	2.171	1276.013	8.242	74.875
	SPIKED SAMPLE 11_0000065.LAB	3/6/2020	17:03:53	150.0	0.999	38.309	201.738	0.202	2.220	1276.533	8.438	74.963
	SPIKED SAMPLE 12_0000066.LAB	3/6/2020	17:04:52	150.4	0.999	38.317	199.095	0.199	2.161	1278.317	8.477	75.949
	ZERO DIRECT_0000001.LAB	3/6/2020	17:06:01	150.8	0.999	2.502	1.810	0.002	-0.382	11.097	8.242	76.309
	ZERO DIRECT_0000002.LAB	3/6/2020	17:07:00	150.3	0.999	0.230	0.451	0.000	0.553	251.567	8.281	75.772
	ZERO DIRECT_0000003.LAB	3/6/2020	17:07:59	150.2	0.999	0.087	0.411	0.000	0.247	169.018	8.594	75.427
	ZERO DIRECT_0000004.LAB	3/6/2020	17:08:58	150.1	0.999	0.038	0.997	0.001	0.176	-19.984	8.516	75.198
	FILTER SPECTRUM_0000005.LAB	3/6/2020	17:09:57	150.1	0.999	0.000	0.000	0.000	0.000	0.000	8.633	75.037
	UNSPIKED SAMPLE 9_0000006.LAB	3/6/2020	17:11:07	150.0	1.000	7.031	68.752	0.069	0.165	137.261	8.672	74.936
	UNSPIKED SAMPLE 9_0000007.LAB	3/6/2020	17:12:21	150.0	1.000	0.196	39.969	0.040	-0.152	-74.403	8.633	74.850
	UNSPIKED SAMPLE 9_0000008.LAB	3/6/2020	17:13:20	150.0	0.999	0.105	39.243	0.039	-0.139	-148.075	8.398	74.716
	UNSPIKED SAMPLE 9_0000009.LAB	3/6/2020	17:14:19	150.0	0.999	0.025	39.344	0.039	-0.155	-115.693	8.633	74.759
	UNSPIKED SAMPLE 9_0000010.LAB	3/6/2020	17:15:18	150.0	0.999	-0.009	37.282	0.037	-0.210	-100.044	8.438	74.743
Sample 9 Ave						0.040	38.623	0.039	-0.168	-121.271	8.490	74.739
	UNSPIKED SAMPLE 10_0000011.LAB	3/6/2020	17:16:16	150.0	0.999	-0.028	36.262	0.036	-0.104	-138.081	8.398	74.652
	UNSPIKED SAMPLE 10_0000012.LAB	3/6/2020	17:17:15	150.3	1.000	-0.039	35.854	0.036	-0.143	-31.470	8.281	75.421
	UNSPIKED SAMPLE 10_0000013.LAB	3/6/2020	17:18:14	150.9	0.999	-0.035	34.683	0.035	-0.116	-46.526	8.281	76.160
	UNSPIKED SAMPLE 10_0000014.LAB	3/6/2020	17:19:13	150.5	1.000	-0.044	35.093	0.035	-0.120	-28.204	8.594	75.665

Notes	Spectrum	Date	Time	Temp	Pressure	Ethane	Ethylene Oxide		Methane	Water	MAX.MKS.LASERPP	Stack Temp
			CST	°C	Atm	ppm	ppb	ppm	ppm	ppm	Volts	°F
	UNSPIKED SAMPLE 10_0000015.LAB	3/6/2020	17:20:12	150.2	0.999	-0.055	33.263	0.033	-0.024	-107.804	8.633	75.324
Sample 10 Ave						-0.045	34.347	0.034	-0.087	-60.845	8.503	75.716
	SPIKED SAMPLE 9_0000016.LAB	3/6/2020	17:21:11	150.1	0.999	17.893	105.257	0.105	0.737	703.432	8.711	75.009
	SPIKED SAMPLE 9_0000017.LAB	3/6/2020	17:22:10	150.1	0.999	34.727	166.548	0.167	1.801	1117.277	8.555	74.820
	SPIKED SAMPLE 9_0000018.LAB	3/6/2020	17:23:09	150.1	0.999	38.059	180.950	0.181	1.691	1321.888	8.516	74.743
	SPIKED SAMPLE 9_0000019.LAB	3/6/2020	17:24:08	150.1	0.999	38.128	180.750	0.181	1.707	1285.906	8.398	74.743
	SPIKED SAMPLE 9_0000020.LAB	3/6/2020	17:25:06	150.1	0.999	38.105	180.911	0.181	1.733	1296.967	8.438	74.637
Spike 9 Ave						38.097	180.870	0.181	1.710	1301.587	8.451	74.708
	SPIKED SAMPLE 10_0000021.LAB	3/6/2020	17:26:05	151.1	1.000	38.101	182.428	0.182	1.737	1423.872	8.672	74.600
	SPIKED SAMPLE 10_0000022.LAB	3/6/2020	17:27:04	150.3	1.000	38.082	181.902	0.182	1.706	1377.078	8.594	74.423
	SPIKED SAMPLE 10_0000023.LAB	3/6/2020	17:28:03	150.1	0.999	38.149	181.006	0.181	1.806	1299.130	8.516	74.377
	SPIKED SAMPLE 10_0000024.LAB	3/6/2020	17:29:02	150.0	0.999	38.157	178.456	0.178	1.740	1373.253	8.516	74.344
	SPIKED SAMPLE 10_0000025.LAB	3/6/2020	17:30:01	150.0	1.000	38.145	180.706	0.181	1.745	1343.749	8.672	74.273
Spike 10 Ave						38.150	180.056	0.180	1.764	1338.710	8.568	74.331
	UNSPIKED SAMPLE 11_0000026.LAB	3/6/2020	17:31:00	150.1	1.000	24.129	127.080	0.127	1.291	809.284	8.438	75.009
	UNSPIKED SAMPLE 11_0000027.LAB	3/6/2020	17:31:59	150.8	1.000	0.438	29.736	0.030	0.103	-23.827	8.555	75.726
	UNSPIKED SAMPLE 11_0000028.LAB	3/6/2020	17:32:58	150.5	1.000	0.162	27.115	0.027	0.120	-25.097	8.359	75.345
	UNSPIKED SAMPLE 11_0000029.LAB	3/6/2020	17:33:56	150.3	1.000	0.084	26.930	0.027	0.130	-95.048	8.242	74.838
	UNSPIKED SAMPLE 11_0000030.LAB	3/6/2020	17:34:55	150.1	1.000	0.038	24.956	0.025	0.093	-122.573	8.281	74.563
Sample 11 Ave						0.094	26.333	0.026	0.114	-80.906	8.294	74.915
	UNSPIKED SAMPLE 12_0000031.LAB	3/6/2020	17:35:54	150.1	0.999	0.014	24.496	0.024	0.091	-107.844	8.359	74.417
	UNSPIKED SAMPLE 12_0000032.LAB	3/6/2020	17:36:53	150.1	1.000	-0.006	23.519	0.024	0.152	-96.275	8.633	74.252
	UNSPIKED SAMPLE 12_0000033.LAB	3/6/2020	17:37:52	150.0	1.000	-0.020	23.790	0.024	0.132	-97.664	8.555	74.209
	UNSPIKED SAMPLE 12_0000034.LAB	3/6/2020	17:38:51	150.1	1.000	-0.022	23.339	0.023	0.163	-160.595	8.711	74.167
	UNSPIKED SAMPLE 12_0000035.LAB	3/6/2020	17:39:50	150.0	0.999	-0.035	22.801	0.023	0.238	-145.347	8.438	74.090
Sample 12 Ave						-0.026	23.310	0.023	0.178	-134.535	8.568	74.155
	SPIKED SAMPLE 11_0000036.LAB	3/6/2020	17:40:49	150.1	1.000	3.260	36.183	0.036	0.400	-0.832	8.477	74.057
	SPIKED SAMPLE 11_0000037.LAB	3/6/2020	17:41:47	150.1	1.000	37.737	170.415	0.170	1.870	1344.857	8.320	74.035
	SPIKED SAMPLE 11_0000038.LAB	3/6/2020	17:42:46	150.1	1.000	38.143	174.082	0.174	1.949	1310.977	8.242	74.005
	SPIKED SAMPLE 11_0000039.LAB	3/6/2020	17:43:45	150.0	1.000	38.176	175.460	0.175	2.020	1279.206	8.711	73.941
	SPIKED SAMPLE 11_0000040.LAB	3/6/2020	17:44:44	150.1	1.000	38.210	173.728	0.174	2.000	1312.379	8.555	74.319
Spike 11 Ave						38.176	174.424	0.174	1.989	1300.854	8.503	74.088

Notes	Spectrum	Date	Time CST	Temp °C	Pressure Atm	Ethane ppm	Ethylene Oxide ppb	Ethylene Oxide ppm	Methane ppm	Water ppm	MAX.MKS.LASERPP Volts	Stack Temp °F
	SPIKED SAMPLE 12_0000041.LAB	3/6/2020	17:45:43	150.7	1.000	38.134	173.163	0.173	1.952	1430.338	8.594	75.256
	SPIKED SAMPLE 12_0000042.LAB	3/6/2020	17:46:42	150.8	0.999	38.117	176.536	0.177	1.982	1485.856	8.438	75.128
	SPIKED SAMPLE 12_0000043.LAB	3/6/2020	17:47:41	150.3	0.999	38.165	175.907	0.176	2.003	1359.025	8.633	74.655
	SPIKED SAMPLE 12_0000044.LAB	3/6/2020	17:48:40	150.1	0.999	38.204	174.982	0.175	2.062	1334.188	8.477	74.301
	SPIKED SAMPLE 12_0000045.LAB	3/6/2020	17:49:38	150.2	1.000	38.200	175.160	0.175	1.997	1384.698	8.594	74.099
Spike 12 Ave						38.190	175.350	0.175	2.021	1359.304	8.568	74.352
	UNSPIKED SAMPLE_0000046.LAB	3/6/2020	17:50:37	150.0	1.000	38.163	172.348	0.172	2.033	1389.325	8.359	74.054
	UNSPIKED SAMPLE_0000047.LAB	3/6/2020	17:51:36	150.1	1.000	2.585	31.832	0.032	0.455	109.242	8.320	73.864
	LOD_0000048.LAB	3/6/2020	17:52:35	150.1	0.999	0.251	22.522	0.023	0.361	-18.027	8.438	73.892
	LOD_0000049.LAB	3/6/2020	17:53:34	150.1	0.999	0.116	22.760	0.023	0.299	26.250	8.594	73.718
	LOD_0000050.LAB	3/6/2020	17:54:33	150.1	1.000	0.070	21.101	0.021	0.365	-42.735	8.672	73.767
	UNSPIKED SAMPLE_0000051.LAB	3/6/2020	17:55:32	150.1	1.000	0.247	21.088	0.021	0.374	-111.303	8.516	73.764
	UNSPIKED SAMPLE_0000052.LAB	3/6/2020	17:56:31	150.1	1.000	0.221	20.375	0.020	0.376	-119.112	8.438	73.779
	UNSPIKED SAMPLE_0000053.LAB	3/6/2020	17:57:30	150.1	1.000	0.135	20.658	0.021	0.465	-115.827	8.320	73.754
	UNSPIKED SAMPLE_0000054.LAB	3/6/2020	17:58:28	150.1	1.000	0.073	19.333	0.019	0.380	-162.814	8.438	73.751
	UNSPIKED SAMPLE_0000055.LAB	3/6/2020	17:59:27	150.2	1.000	0.059	19.414	0.019	0.496	-185.629	8.359	74.130
	LOD_0000056.LAB	3/6/2020	18:00:26	150.8	1.000	13.679	127.811	0.128	2.032	-599.473	8.516	75.067
	UNSPIKED SAMPLE_0000057.LAB	3/6/2020	18:01:25	150.7	1.000	0.021	20.327	0.020	0.438	8.396	8.516	74.786
	UNSPIKED SAMPLE_0000058.LAB	3/6/2020	18:02:24	150.3	1.000	-0.025	19.710	0.020	0.473	-57.176	8.477	74.289
	ZERO DIRECT_0000001.LAB	3/6/2020	18:03:47	150.2	0.999	-0.021	4.238	0.004	-0.679	-68.911	8.438	73.913
	ZERO DIRECT_0000002.LAB	3/6/2020	18:04:46	150.2	1.000	0.067	1.667	0.002	0.516	199.428	8.438	73.816
	ZERO DIRECT_0000003.LAB	3/6/2020	18:05:44	150.0	0.999	0.036	1.183	0.001	0.313	61.489	8.516	73.660
	ZERO DIRECT_0000004.LAB	3/6/2020	18:06:43	150.2	0.999	0.005	1.264	0.001	0.054	73.531	8.242	73.706
	FILTER SPECTRUM_0000005.LAB	3/6/2020	18:07:42	150.1	0.999	0.000	0.000	0.000	0.000	0.000	8.398	73.556
	EQUILIBRATE CTS_0000006.LAB	3/6/2020	18:08:01	150.1	0.992	-0.602	-33.946	-0.034	5.991	-36251.747	8.438	73.629
	LOD_0000007.LAB	3/6/2020	18:09:39	150.1	0.999	0.022	17.164	0.017	-0.118	-164.683	8.320	73.574
	LOD_0000008.LAB	3/6/2020	18:10:37	150.1	0.999	-0.003	17.263	0.017	-0.114	-200.436	8.398	73.526
	LOD_0000009.LAB	3/6/2020	18:11:36	150.0	1.000	-0.010	16.261	0.016	-0.067	-105.790	8.281	73.519
	LOD_0000010.LAB	3/6/2020	18:12:35	150.0	1.000	-0.031	14.929	0.015	-0.171	-48.233	8.555	73.477
	LOD_0000011.LAB	3/6/2020	18:13:34	150.1	1.000	-0.021	14.033	0.014	-0.062	-132.711	8.555	73.550
	LOD_0000012.LAB	3/6/2020	18:14:33	150.4	0.999	-0.023	15.652	0.016	-0.122	-121.790	8.438	74.582
	LOD_0000013.LAB	3/6/2020	18:15:32	150.9	1.000	-0.016	16.571	0.017	-0.070	43.796	8.555	74.908
	LOD_0000014.LAB	3/6/2020	18:16:31	150.5	1.000	-0.034	15.864	0.016	-0.152	111.353	8.242	74.450
	LOD_0000015.LAB	3/6/2020	18:17:29	150.2	1.000	-0.029	15.496	0.015	-0.148	-97.140	8.359	74.066
	LOD_0000016.LAB	3/6/2020	18:18:28	150.1	1.000	-0.024	15.556	0.016	-0.161	-46.850	8.398	73.819

Notes	Spectrum	Date	Time CST	Temp °C	Pressure Atm	Ethane ppm	Ethylene Oxide ppb	Ethylene Oxide ppm	Methane ppm	Water ppm	MAX.MKS.LASERPP Volts	Stack Temp °F
	LOD_0000017.LAB	3/6/2020	18:19:27	150.2	1.000	-0.025	16.477	0.016	-0.126	-86.520	8.398	73.700
	LOD_0000018.LAB	3/6/2020	18:20:26	150.1	1.000	-0.032	15.004	0.015	-0.175	-36.674	8.555	73.584
LOD						0.047	2.849	0.003	0.120	260.073	0.337	1.473
	CATALYST EFFICIENCY TEST_0000019.LAI	3/6/2020	18:21:25	150.2	1.000	3.917	32.388	0.032	0.611	-68.029	8.438	73.547
	CATALYST EFFICIENCY TEST_0000020.LAI	3/6/2020	18:22:24	150.1	1.000	242.842	1422.332	1.422	3.153	-5496.999	8.359	73.461
	ZERO DIRECT_0000001.LAB	3/6/2020	18:27:52	150.0	0.999	0.065	1.388	0.001	0.032	93.620	8.320	73.385
	ZERO DIRECT_0000002.LAB	3/6/2020	18:28:51	150.4	1.000	0.031	-0.203	0.000	-0.066	117.295	8.281	74.286
	ZERO DIRECT_0000003.LAB	3/6/2020	18:29:50	151.0	1.000	0.028	2.945	0.003	-0.084	-26.410	8.633	74.750
	ZERO DIRECT_0000004.LAB	3/6/2020	18:30:49	150.4	0.999	0.009	2.052	0.002	-0.127	54.974	8.516	74.338
	FILTER SPECTRUM_0000005.LAB	3/6/2020	18:31:48	150.2	0.999	0.000	0.000	0.000	0.000	0.000	8.555	73.977
	CATALYST EFFICIENCY SAMPLE_0000006	3/6/2020	18:32:47	150.2	1.000	-0.037	22.227	0.022	-0.149	-29.400	8.711	73.657
	CATALYST EFFICIENCY SAMPLE_0000007	3/6/2020	18:33:45	150.0	1.000	-0.039	22.888	0.023	-0.097	-70.693	8.242	73.523
	CATALYST EFFICIENCY SAMPLE_0000008	3/6/2020	18:34:44	150.1	0.999	-0.043	19.375	0.019	-0.107	-149.820	8.242	73.452
	CATALYST EFFICIENCY SAMPLE_0000009	3/6/2020	18:35:43	150.1	1.000	-0.051	18.189	0.018	-0.045	-124.941	8.438	73.416
	CATALYST EFFICIENCY SAMPLE_0000010	3/6/2020	18:36:42	150.0	0.999	-0.054	19.307	0.019	-0.179	-19.011	8.477	73.342
	CATALYST EFFICIENCY SPIKE_0000011.LA	3/6/2020	18:37:41	150.1	1.000	23.401	112.231	0.112	0.957	936.740	8.516	73.361
	CATALYST EFFICIENCY SPIKE_0000012.LA	3/6/2020	18:38:40	150.1	0.999	37.640	166.985	0.167	1.727	1261.672	8.438	73.315
	CATALYST EFFICIENCY SPIKE_0000013.LA	3/6/2020	18:39:39	150.1	1.000	38.110	179.172	0.179	1.654	1362.341	8.398	73.263
	CATALYST EFFICIENCY SPIKE_0000014.LA	3/6/2020	18:40:38	150.1	1.000	38.163	176.734	0.177	1.692	1391.845	8.320	73.269
	CATALYST EFFICIENCY SPIKE_0000015.LA	3/6/2020	18:41:36	150.1	1.000	38.224	175.416	0.175	1.737	1355.388	8.555	73.190
	CATALYST EFFICIENCY OXIDIZE_0000016.	3/6/2020	18:42:35	150.0	1.000	38.494	54.619	0.055	0.052	1182.255	8.516	73.205
	CATALYST EFFICIENCY OXIDIZE_0000017.	3/6/2020	18:43:34	150.4	1.000	39.348	-17.468	-0.017	2.483	1585.235	8.359	74.151
	CATALYST EFFICIENCY OXIDIZE_0000018.	3/6/2020	18:44:33	150.9	0.999	39.289	-15.851	-0.016	2.244	1715.424	8.203	74.661
	CATALYST EFFICIENCY OXIDIZE_0000019.	3/6/2020	18:45:32	150.5	0.999	39.245	-16.155	-0.016	2.061	1741.550	8.203	74.194
	CATALYST EFFICIENCY OXIDIZE_0000020.	3/6/2020	18:46:31	150.3	0.999	39.302	-16.750	-0.017	2.123	1561.940	8.320	73.843
	ZERO SYSTEM_0000021.LAB	3/6/2020	18:47:30	150.1	1.000	35.892	138.960	0.139	2.441	-21.241	8.477	73.532
	ZERO SYSTEM_0000022.LAB	3/6/2020	18:48:29	150.2	1.000	0.375	-6.922	-0.007	-1.082	-1061.720	8.438	73.315
	ZERO SYSTEM_0000023.LAB	3/6/2020	18:49:28	150.1	1.000	0.230	-7.876	-0.008	-1.178	-1108.998	8.555	73.141
	ZERO SYSTEM_0000024.LAB	3/6/2020	18:50:26	150.1	1.000	0.175	-7.811	-0.008	-1.274	-1124.874	8.594	73.098
	ZERO SYSTEM_0000025.LAB	3/6/2020	18:51:25	150.1	1.000	0.137	-9.704	-0.010	-1.188	-1141.607	8.320	73.156
	CATALYST EFFICIENCY SAMPLE_0000026	3/6/2020	18:52:24	150.2	1.000	0.164	-4.849	-0.005	-0.123	-791.076	8.516	73.055
	CATALYST EFFICIENCY SAMPLE_0000027	3/6/2020	18:53:23	150.1	1.000	0.008	13.186	0.013	0.672	195.225	8.242	72.970
	CATALYST EFFICIENCY SAMPLE_0000028	3/6/2020	18:54:22	150.1	1.000	-0.032	14.405	0.014	0.378	103.640	8.398	72.973
	CATALYST EFFICIENCY SAMPLE_0000029	3/6/2020	18:55:21	150.1	1.000	-0.025	12.938	0.013	0.211	55.734	8.438	72.994
	CATALYST EFFICIENCY SAMPLE_0000030	3/6/2020	18:56:20	150.1	1.000	-0.030	12.607	0.013	0.248	77.672	8.711	72.988
	ZERO DIRECT_0000031.LAB	3/6/2020	18:57:19	150.1	0.999	0.117	8.643	0.009	0.001	46.526	8.711	73.263

Notes	Spectrum	Date	Time	Temp	Pressure	Ethane	Ethylene Oxide		Methane	Water	MAX.MKS.LASERPP	Stack Temp
			CST	°C	Atm	ppm	ppb	ppm	ppm	ppm	Volts	°F
	ZERO DIRECT_0000032.LAB	3/6/2020	18:58:18	150.8	1.000	0.025	1.306	0.001	0.788	345.879	8.477	74.246
	ZERO DIRECT_0000033.LAB	3/6/2020	18:59:16	150.8	1.000	0.023	1.016	0.001	0.834	288.124	8.477	74.325
	ZERO DIRECT_0000034.LAB	3/6/2020	19:00:15	150.3	0.999	0.010	0.427	0.000	0.583	50.864	8.242	73.843
	FILTER SPECTRUM_0000035.LAB	3/6/2020	19:01:14	150.1	1.000	-0.025	1.581	0.002	0.378	203.646	8.203	73.498
	CATALYST EFFICIENCY SAMPLE_0000036	3/6/2020	19:03:16	150.1	1.000	-0.046	13.182	0.013	0.165	-24.886	8.477	73.138
	CATALYST EFFICIENCY SAMPLE_0000037	3/6/2020	19:04:15	150.1	1.000	-0.065	12.458	0.012	0.121	81.546	8.398	73.059
	CATALYST EFFICIENCY SAMPLE_0000038	3/6/2020	19:05:14	150.1	1.001	-0.057	12.308	0.012	0.126	-74.359	8.398	72.988
	CATALYST EFFICIENCY SAMPLE_0000039	3/6/2020	19:06:13	150.1	1.000	-0.060	11.954	0.012	0.210	-26.904	8.203	73.034
	CATALYST EFFICIENCY SAMPLE_0000040	3/6/2020	19:07:12	150.1	1.000	-0.070	12.148	0.012	0.106	49.527	8.359	72.988
	CATALYST EFFICIENCY SPIKE_0000041.LA	3/6/2020	19:08:11	150.0	1.000	0.493	18.643	0.019	1.086	454.450	8.320	72.952
	CATALYST EFFICIENCY SPIKE_0000042.LA	3/6/2020	19:09:09	150.0	1.000	29.878	130.189	0.130	1.874	1201.758	8.438	73.016
	CATALYST EFFICIENCY SPIKE_0000043.LA	3/6/2020	19:10:08	150.0	1.000	38.006	163.297	0.163	1.828	1333.288	8.555	72.936
	CATALYST EFFICIENCY SPIKE_0000044.LA	3/6/2020	19:11:07	150.1	1.000	38.030	163.581	0.164	1.952	1202.072	8.555	72.967
	CATALYST EFFICIENCY SPIKE_0000045.LA	3/6/2020	19:12:06	150.1	1.000	38.065	164.059	0.164	1.924	1305.142	8.672	73.291
	CATALYST EFFICIENCY OXIDIZE_0000046.	3/6/2020	19:13:05	150.8	1.000	38.499	36.637	0.037	0.300	1091.478	8.672	74.328
	CATALYST EFFICIENCY OXIDIZE_0000047.	3/6/2020	19:14:04	150.7	0.999	39.293	-14.551	-0.015	2.550	1558.551	8.438	74.237
	CATALYST EFFICIENCY OXIDIZE_0000048.	3/6/2020	19:15:03	150.3	0.999	39.312	-15.942	-0.016	2.444	1603.024	8.242	73.733
	CATALYST EFFICIENCY OXIDIZE_0000049.	3/6/2020	19:16:20	150.2	1.000	39.342	-15.860	-0.016	2.305	1445.918	8.555	73.315
	CATALYST EFFICIENCY OXIDIZE_0000050.	3/6/2020	19:17:19	150.1	1.000	39.315	-15.496	-0.015	2.145	1491.079	8.398	73.199
	ZERO SYSTEM_0000051.LAB	3/6/2020	19:18:18	150.1	1.000	25.589	120.390	0.120	1.545	-354.154	8.320	73.113
	ZERO SYSTEM_0000052.LAB	3/6/2020	19:19:17	150.1	1.000	0.306	-7.866	-0.008	-1.147	-1100.584	8.281	73.059
	ZERO SYSTEM_0000053.LAB	3/6/2020	19:20:16	150.1	1.000	0.200	-8.995	-0.009	-1.143	-1094.415	8.281	73.001
	ZERO SYSTEM_0000054.LAB	3/6/2020	19:21:15	150.2	1.000	0.151	-8.394	-0.008	-1.212	-1162.987	8.594	72.943
	ZERO SYSTEM_0000055.LAB	3/6/2020	19:22:13	150.1	1.000	0.115	-9.694	-0.010	-1.174	-1140.386	8.555	72.973
	ZERO SYSTEM_0000056.LAB	3/6/2020	19:23:12	150.1	1.000	0.101	-8.546	-0.009	-1.191	-1155.506	8.438	73.010
	ZERO SYSTEM_0000057.LAB	3/6/2020	19:24:11	150.1	1.000	0.078	-9.102	-0.009	-1.195	-1154.988	8.203	72.964
	ZERO SYSTEM_0000058.LAB	3/6/2020	19:25:10	150.1	1.000	0.075	-9.477	-0.009	-1.208	-1139.752	8.398	72.909
	ZERO SYSTEM_0000059.LAB	3/6/2020	19:26:09	150.1	1.000	0.076	-10.208	-0.010	-1.190	-1143.376	8.320	72.952
	ZERO SYSTEM_0000060.LAB	3/6/2020	19:27:08	150.3	1.000	0.056	-10.293	-0.010	-1.240	-1172.839	8.477	73.638
	EQUILIBRATE EO_0000061.LAB	3/6/2020	19:27:47	150.8	0.994	304.076	1571.782	1.572	-0.347	-2605.788	8.438	74.228
	EQUILIBRATE EO_0000062.LAB	3/6/2020	19:28:02	150.9	0.994	503.524	2245.776	2.246	-1.382	-2962.380	8.594	74.429
	EQUILIBRATE EO_0000063.LAB	3/6/2020	19:28:17	150.8	0.993	505.310	2253.233	2.253	-1.534	-3008.140	8.789	74.374
	EQUILIBRATE EO_0000064.LAB	3/6/2020	19:28:31	150.8	0.993	505.541	2257.477	2.257	-1.444	-2983.736	8.633	74.292
	EO DIRECT_0000065.LAB	3/6/2020	19:28:46	150.7	0.993	505.762	2256.633	2.257	-1.434	-3188.394	8.477	74.160
	EO DIRECT_0000066.LAB	3/6/2020	19:29:01	150.5	0.993	506.030	2259.004	2.259	-1.410	-3231.789	8.516	74.069
	EO DIRECT_0000067.LAB	3/6/2020	19:29:15	150.4	0.993	506.321	2262.864	2.263	-1.537	-3124.403	8.594	73.916
	EO DIRECT_0000068.LAB	3/6/2020	19:29:30	150.3	0.993	506.395	2262.259	2.262	-1.554	-3343.212	8.594	73.819

Notes	Spectrum	Date	Time	Temp	Pressure	Ethane	Ethylene Oxide		Methane	Water	MAX.MKS.LASERPP	Stack Temp
			CST	°C	Atm	ppm	ppb	ppm	ppm	ppm	Volts	°F
	EO DIRECT_0000069.LAB	3/6/2020	19:29:45	150.3	0.993	506.715	2263.945	2.264	-1.458	-3146.059	8.281	73.794
	EO DIRECT_0000070.LAB	3/6/2020	19:30:00	150.2	0.993	506.541	2261.010	2.261	-1.439	-3326.147	8.281	73.687
	EO DIRECT_0000071.LAB	3/6/2020	19:30:14	150.1	0.993	506.562	2263.861	2.264	-1.480	-3334.378	8.750	73.626
	EO DIRECT_0000072.LAB	3/6/2020	19:30:29	150.1	0.993	506.635	2264.438	2.264	-1.519	-3360.751	8.164	73.544
Post Cal Direct Ave						506.370	2261.752	2.262	-1.479	-3256.892	8.457	73.827
	ZERO DIRECT_0000073.LAB	3/6/2020	19:30:44	150.1	0.993	307.841	1599.437	1.599	0.122	-2632.440	8.398	73.492
	ZERO DIRECT_0000074.LAB	3/6/2020	19:30:58	150.1	0.993	11.057	46.524	0.047	-1.351	-1384.336	8.125	73.483
	ZERO DIRECT_0000075.LAB	3/6/2020	19:31:13	150.1	0.993	0.823	-7.820	-0.008	-1.210	-1284.879	8.516	73.455
	ZERO DIRECT_0000076.LAB	3/6/2020	19:31:28	150.1	0.993	0.308	-4.243	-0.004	-1.341	-1341.274	8.242	73.407

TOM Destruction and Removal Efficiency Test

Background

Max Analytical Technologies developed a Thermal Oxidizer Module (TOM) for zeroing of ethylene oxide (EO) continuous monitoring systems with sample gas. The catalyst within the TOM is set to 125°C to fully oxidize EO without reducing the concentrations of water and methane in the sample. This allows an Interference Spectrum to be collected that matches the sample spectrum exceedingly well. When this Interference Spectrum is added to the analysis method, zero drift and bias in the EO measurement due to spectral interferences are minimized.

The TOM contains two catalyst cores in series. Stack gas is either run through the catalysts in Oxidation Mode to remove EO and collect a background spectrum, or stack gas is run in Bypass Mode to measure ethylene oxide (Figure 1).

Figure 1—Thermal Oxidizer Module (TOM) Flow Path

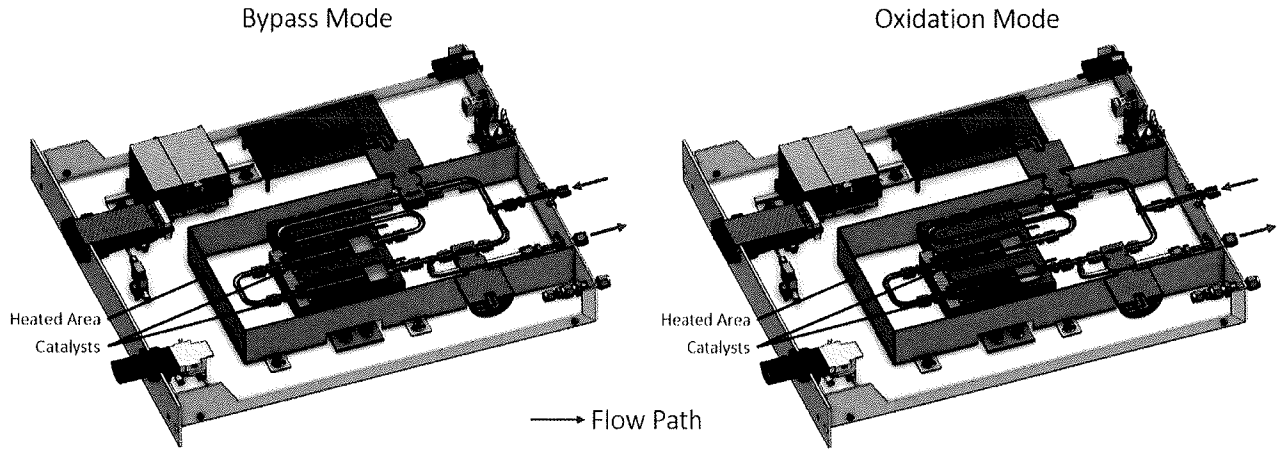

Destruction efficiency of ethylene oxide is dependent upon the condition of the catalyst, the temperature of the catalyst, and the sample flow rate. To ensure that stack emissions data are not biased low due to incomplete removal of ethylene oxide, destruction efficiency should be assessed periodically under the same sampling conditions (flow rate, temperature) as the stack emissions data.

Methods

To assess the destruction efficiency of ethylene oxide through the TOM, the following procedure was followed on March 9, 2020, using the same catalyst temperature (125°C) and sample flow rate (5L/min) as the Medline Relative Accuracy Test Audit (RATA). The procedure is represented graphically in Figure 2 below.

1. Stack gas was run through the TOM in Oxidation Mode at a flow rate of approximately 5L/min and catalyst temperature of 125°C. After 4 minutes of equilibration time, an Interference Spectrum was collected and added to the analysis method.

2. The TOM was switched to Bypass Mode, and ethylene oxide in the stack gas was measured for 10 minutes.

3. With the TOM in Bypass Mode, 50ppm ethylene oxide was spiked to the sample probe at a flow rate of 0.2L/min using a mass flow controller (MFC) and diluted in stack gas. The spiked sample was measured for 10 minutes.

4. The TOM was switched to Oxidize Mode. Destruction of ethylene oxide was monitored for 10 minutes.

Figure 2—Destruction Efficiency Test

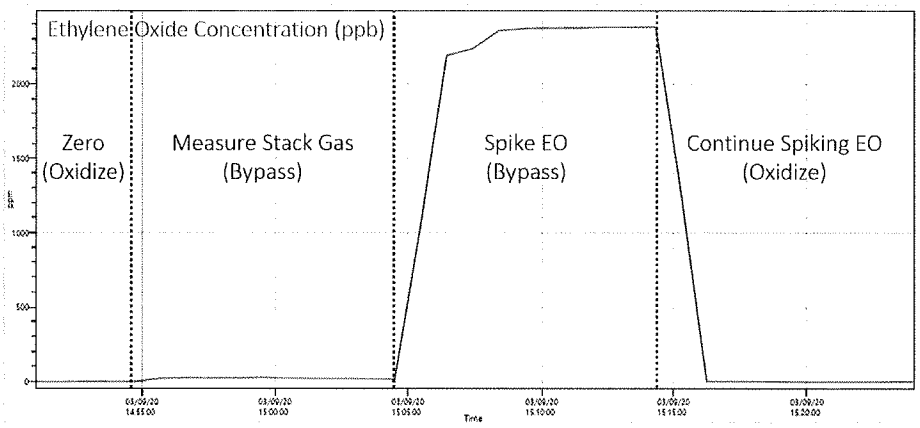

Results

For quality assurance and to assess the ethylene oxide calibration stability, the 50ppm ethylene oxide cylinder was measured directly by the StarBoost™ FTIR. The measured concentration was within 5% of the certified cylinder value.

Certified Calibration Cylinders				
Bottle	Expiration	Gas	Certified Conc (ppm)	Analytical Uncertainty
CC513213	15-Oct-21	Ethylene Oxide	51.60	±2%

Direct Calibration Check					
Gas	Response (ppm)	Certified Conc (ppm)	% of Certified	Criteria	Validation
Ethylene Oxide	53.35	51.60	3.39%	±5%	PASS

Results of two independent destruction tests are shown below. For both ethylene oxide spikes through the catalyst, the destruction efficiency of ethylene oxide was greater than or equal to 99.99%.

TOM Ethylene Oxide Destruction & Removal Efficiency					
Spike	Zero Ave (ppb)	EO Sample Ave (ppb)	EO Spike Ave (ppb)	EO Oxidation Ave (ppb)	EO DRE
Spike 1	-0.27	22.16	2379	-0.07	100.00%
Spike 2	-0.27	23.67	2405	0.21	99.99%

DRE = [(EO Spike Ave - EO Oxidation Ave) / EO Spike Ave] x 100

Notes	Spectrum	Date	Time CST	Temp °C	Pressure Atm	Ethane ppm	Ethylene Oxide ppb	Ethylene Oxide ppm	Filter Interference.LAB Scale	Methane Scale	Water ppm	MAX.MKS.LASERPP Volts	Stack Temp °F
	ZERO DIRECT_0000001.LAB	3/9/2020	14:50:45	149.9	0.983	0.002	-0.646	-0.001	0.990	0.113	76.982	8.516	80.128
	ZERO DIRECT_0000002.LAB	3/9/2020	14:51:44	150.1	0.982	0.010	-1.816	-0.002	0.998	0.162	14.212	8.633	80.903
	ZERO DIRECT_0000003.LAB	3/9/2020	14:52:43	150.4	0.983	-0.013	0.628	0.001	0.992	-0.036	75.567	8.398	81.645
	ZERO DIRECT_0000004.LAB	3/9/2020	14:53:41	150.4	0.983	0.005	0.487	0.000	0.998	0.095	-1.795	8.477	81.673
	FILTER SPECTRUM_0000005.LAB	3/9/2020	14:54:40	150.2	0.983	0.000	0.000	0.000	1.000	0.000	0.000	8.555	81.200
Catalyst Zero Direct Ave						0.001	-0.269	0.000	0.996	0.067	32.993	8.516	81.110
	CATALYST EFFICIENCY SAMPLE_0000006.LAB	3/9/2020	14:55:39	150.0	0.983	-0.023	22.402	0.022	1.010	-0.062	-163.010	8.516	80.806
	CATALYST EFFICIENCY SAMPLE_0000007.LAB	3/9/2020	14:56:38	150.0	0.983	-0.041	25.855	0.026	1.011	-0.155	-150.490	8.516	80.531
	CATALYST EFFICIENCY SAMPLE_0000008.LAB	3/9/2020	14:57:37	150.0	0.983	-0.058	24.553	0.025	1.008	-0.259	-93.339	8.125	80.311
	CATALYST EFFICIENCY SAMPLE_0000009.LAB	3/9/2020	14:58:36	149.9	0.983	-0.063	23.920	0.024	1.009	-0.302	-99.503	8.398	80.250
	CATALYST EFFICIENCY SAMPLE_0000010.LAB	3/9/2020	14:59:35	150.1	0.983	-0.020	27.157	0.027	1.017	-0.017	-203.414	8.594	80.916
	CATALYST EFFICIENCY SAMPLE_0000011.LAB	3/9/2020	15:00:33	150.4	0.983	-0.031	22.581	0.023	1.010	-0.142	-133.566	8.438	81.697
	CATALYST EFFICIENCY SAMPLE_0000012.LAB	3/9/2020	15:01:32	150.4	0.983	-0.076	20.241	0.020	1.003	-0.465	-25.802	8.398	81.615
	CATALYST EFFICIENCY SAMPLE_0000013.LAB	3/9/2020	15:02:31	150.2	0.983	-0.072	20.752	0.021	1.007	-0.446	-60.778	8.516	81.337
	CATALYST EFFICIENCY SAMPLE_0000014.LAB	3/9/2020	15:03:30	150.1	0.983	-0.073	18.245	0.018	1.011	-0.325	-112.051	8.242	80.897
	CATALYST EFFICIENCY SAMPLE_0000015.LAB	3/9/2020	15:04:29	150.0	0.983	-0.068	15.920	0.016	1.013	-0.398	-112.828	8.516	80.821
Sample 1 Ave						-0.053	22.163	0.022	1.010	-0.257	-115.478	8.426	80.918
	CATALYST EFFICIENCY SPIKE_0000016.LAB	3/9/2020	15:05:28	150.0	0.983	0.294	1038.409	1.038	1.038	0.640	-541.063	8.633	81.276
	CATALYST EFFICIENCY SPIKE_0000017.LAB	3/9/2020	15:06:27	150.0	0.983	0.684	2190.984	2.191	1.054	1.552	-876.372	8.438	81.541
	CATALYST EFFICIENCY SPIKE_0000018.LAB	3/9/2020	15:07:26	150.2	0.983	0.846	2236.962	2.237	1.033	1.108	-610.669	8.281	81.688
	CATALYST EFFICIENCY SPIKE_0000019.LAB	3/9/2020	15:08:25	150.4	0.983	0.634	2357.934	2.358	0.999	0.568	-239.682	8.711	81.975
	CATALYST EFFICIENCY SPIKE_0000020.LAB	3/9/2020	15:09:23	150.4	0.983	0.666	2371.890	2.372	1.014	0.886	-439.474	8.711	83.013
	CATALYST EFFICIENCY SPIKE_0000021.LAB	3/9/2020	15:10:22	150.2	0.983	0.656	2375.438	2.375	1.019	0.856	-452.913	8.594	81.621
	CATALYST EFFICIENCY SPIKE_0000022.LAB	3/9/2020	15:11:21	150.0	0.983	0.642	2375.007	2.375	1.021	0.830	-475.448	8.359	81.792
	CATALYST EFFICIENCY SPIKE_0000023.LAB	3/9/2020	15:12:20	150.0	0.983	0.636	2379.776	2.380	1.013	0.635	-401.493	8.242	80.852
	CATALYST EFFICIENCY SPIKE_0000024.LAB	3/9/2020	15:13:19	150.0	0.983	0.652	2380.279	2.380	1.015	0.752	-420.699	8.203	80.729
	CATALYST EFFICIENCY SPIKE_0000025.LAB	3/9/2020	15:14:18	149.9	0.982	0.642	2382.868	2.383	1.015	0.767	-411.877	8.398	80.549
Spike 1 Ave						0.645	2378.674	2.379	1.016	0.768	-432.486	8.359	81.109
	CATALYST EFFICIENCY OXIDIZE_0000026.LAB	3/9/2020	15:15:17	150.1	0.983	0.256	1282.430	1.282	1.061	-0.930	-516.361	8.594	81.276
	CATALYST EFFICIENCY OXIDIZE_0000027.LAB	3/9/2020	15:16:15	150.4	0.983	0.130	2.671	0.003	0.889	1.737	833.195	8.398	81.996
	CATALYST EFFICIENCY OXIDIZE_0000028.LAB	3/9/2020	15:17:14	150.4	0.982	0.095	3.096	0.003	0.885	1.231	931.011	8.398	81.712
	CATALYST EFFICIENCY OXIDIZE_0000029.LAB	3/9/2020	15:18:13	150.1	0.983	0.111	1.770	0.002	0.902	1.298	753.790	8.633	81.319
	CATALYST EFFICIENCY OXIDIZE_0000030.LAB	3/9/2020	15:19:12	150.0	0.982	0.110	0.395	0.000	0.932	1.366	461.204	8.555	80.855
	CATALYST EFFICIENCY OXIDIZE_0000031.LAB	3/9/2020	15:20:11	149.9	0.983	0.042	-0.847	-0.001	0.914	0.745	741.623	8.594	80.226
	CATALYST EFFICIENCY OXIDIZE_0000032.LAB	3/9/2020	15:21:10	150.0	0.982	0.087	-0.401	0.000	0.924	1.067	598.151	8.438	80.186
	CATALYST EFFICIENCY OXIDIZE_0000033.LAB	3/9/2020	15:22:09	149.9	0.982	0.078	-0.610	-0.001	0.933	1.016	533.305	8.359	80.153
	CATALYST EFFICIENCY OXIDIZE_0000034.LAB	3/9/2020	15:23:08	150.3	0.982	0.060	0.434	0.000	0.923	0.746	658.162	8.281	81.044
	CATALYST EFFICIENCY OXIDIZE_0000035.LAB	3/9/2020	15:24:06	150.4	0.982	0.056	0.582	0.001	0.921	0.745	662.912	8.633	82.149
Oxidation 1 Ave						0.072	-0.074	0.000	0.924	0.947	609.226	8.477	80.769
	CATALYST EFFICIENCY SAMPLE_0000036.LAB	3/9/2020	15:25:05	150.4	0.982	0.119	251.181	0.251	0.961	0.689	263.737	8.359	81.572
	CATALYST EFFICIENCY SAMPLE_0000037.LAB	3/9/2020	15:26:04	150.1	0.983	-0.032	88.591	0.089	1.024	-0.350	-222.026	8.359	81.123

Notes	Spectrum	Date	Time	Temp	Pressure	Ethane	Ethylene Oxide		Filter Interference.LAB	Methane	Water	MAX.MKS.LASERPP	Stack Temp
			CST	°C	Atm	ppm	ppb	ppm	Scale	Scale	ppm	Volts	°F
	CATALYST EFFICIENCY SAMPLE_0000038.LAB	3/9/2020	15:27:03	150.0	0.982	-0.021	42.544	0.043	1.046	-0.166	-448.700	8.242	81.148
	CATALYST EFFICIENCY SAMPLE_0000039.LAB	3/9/2020	15:28:02	149.9	0.982	0.008	32.685	0.033	1.070	0.127	-713.082	8.594	80.726
	CATALYST EFFICIENCY SAMPLE_0000040.LAB	3/9/2020	15:29:01	149.9	0.983	-0.055	29.688	0.030	1.034	-0.440	-306.454	8.594	80.336
	CATALYST EFFICIENCY SAMPLE_0000041.LAB	3/9/2020	15:30:00	149.9	0.983	-0.032	26.975	0.027	1.042	-0.281	-375.592	8.711	80.659
	CATALYST EFFICIENCY SAMPLE_0000042.LAB	3/9/2020	15:30:58	150.2	0.983	-0.041	25.214	0.025	1.041	-0.400	-352.098	8.398	81.676
	CATALYST EFFICIENCY SAMPLE_0000043.LAB	3/9/2020	15:31:57	150.4	0.983	-0.062	22.810	0.023	1.039	-0.557	-314.786	8.359	82.375
	CATALYST EFFICIENCY SAMPLE_0000044.LAB	3/9/2020	15:32:56	150.3	0.983	-0.079	23.391	0.023	1.039	-0.716	-279.998	8.438	82.051
	CATALYST EFFICIENCY SAMPLE_0000045.LAB	3/9/2020	15:33:55	150.1	0.982	-0.094	19.949	0.020	1.039	-0.884	-282.712	8.555	81.462
Sample 2 Ave						-0.062	23.668	0.024	1.040	-0.567	-321.037	8.492	81.645
	CATALYST EFFICIENCY SPIKE_0000046.LAB	3/9/2020	15:34:54	150.0	0.983	-0.073	19.267	0.019	1.044	-0.749	-330.131	8.438	81.197
	CATALYST EFFICIENCY SPIKE_0000047.LAB	3/9/2020	15:35:53	150.0	0.983	0.537	2127.034	2.127	1.031	0.094	-450.517	8.477	80.931
	CATALYST EFFICIENCY SPIKE_0000048.LAB	3/9/2020	15:36:52	149.9	0.983	0.621	2333.656	2.334	1.030	0.253	-488.545	8.398	80.775
	CATALYST EFFICIENCY SPIKE_0000049.LAB	3/9/2020	15:37:51	150.0	0.982	0.646	2370.033	2.370	1.031	0.270	-467.582	8.672	81.148
	CATALYST EFFICIENCY SPIKE_0000050.LAB	3/9/2020	15:38:49	150.3	0.982	0.642	2403.692	2.404	1.034	0.526	-556.386	8.672	82.109
	CATALYST EFFICIENCY SPIKE_0000051.LAB	3/9/2020	15:39:48	150.5	0.983	0.627	2403.876	2.404	1.030	0.419	-476.221	8.594	82.442
	CATALYST EFFICIENCY SPIKE_0000052.LAB	3/9/2020	15:40:47	150.2	0.983	0.599	2403.928	2.404	1.026	0.170	-436.739	8.438	81.892
	CATALYST EFFICIENCY SPIKE_0000053.LAB	3/9/2020	15:41:46	150.1	0.982	0.606	2406.878	2.407	1.030	0.227	-470.171	8.477	81.450
	CATALYST EFFICIENCY SPIKE_0000054.LAB	3/9/2020	15:42:45	149.9	0.982	0.600	2405.464	2.405	1.035	0.309	-535.981	8.516	81.114
Spike 2 Ave						0.615	2404.768	2.405	1.031	0.330	-495.100	8.539	81.802
	CATALYST EFFICIENCY OXIDIZE_0000055.LAB	3/9/2020	15:43:44	149.9	0.982	0.041	425.834	0.426	1.027	-0.917	-117.161	8.594	80.870
	CATALYST EFFICIENCY OXIDIZE_0000056.LAB	3/9/2020	15:44:43	149.9	0.982	0.071	-1.141	-0.001	0.892	0.949	894.424	8.281	80.769
	CATALYST EFFICIENCY OXIDIZE_0000057.LAB	3/9/2020	15:45:41	150.1	0.982	0.057	-0.083	0.000	0.909	0.847	757.904	8.359	81.526
	CATALYST EFFICIENCY OXIDIZE_0000058.LAB	3/9/2020	15:46:40	150.3	0.981	0.039	0.746	0.001	0.922	0.607	725.057	8.633	82.210
	CATALYST EFFICIENCY OXIDIZE_0000059.LAB	3/9/2020	15:47:39	150.4	0.982	0.026	1.066	0.001	0.930	0.408	642.788	8.711	82.308
	CATALYST EFFICIENCY OXIDIZE_0000060.LAB	3/9/2020	15:48:38	150.1	0.982	0.006	0.463	0.000	0.932	0.128	658.669	8.516	81.731
Oxidation 2 Ave						0.040	0.210	0.000	0.917	0.588	735.768	8.500	81.709
	50PPM EO DIRECT_0000061.LAB	3/9/2020	15:49:37	150.0	0.975	0.211	831.254	0.831	1.003	-0.100	-20.611	8.281	81.285
	50PPM EO DIRECT_0000062.LAB	3/9/2020	15:50:36	150.0	0.975	6.447	52265.568	52.266	-2.558	-1.305	37653.810	8.281	81.026
	50PPM EO DIRECT_0000063.LAB	3/9/2020	15:51:35	150.0	0.975	5.871	53702.937	53.703	-1.808	-0.820	28927.080	8.750	80.836
	50PPM EO DIRECT_0000064.LAB	3/9/2020	15:52:34	149.9	0.975	5.867	53702.468	53.702	-1.808	-0.801	28944.891	8.594	80.800
	50PPM EO DIRECT_0000065.LAB	3/9/2020	15:53:32	150.1	0.975	5.864	53724.356	53.724	-1.809	-0.779	28947.925	8.398	81.413
EO Direct Ave						6.012	53348.832	53.349	-1.996	-0.926	31118.426	8.506	81.019
	ZERO DIRECT_0000066.LAB	3/9/2020	15:54:31	150.4	0.981	1.708	6268.817	6.269	1.089	-1.087	-2014.582	8.672	82.073
	ZERO DIRECT_0000067.LAB	3/9/2020	15:55:30	150.5	0.981	-0.026	11.162	0.011	0.994	-0.144	142.542	8.594	82.341

EMRC Gas Flow Monitor RM-202-SN 00644

7-Day Calibration Drift Determination

MAX Analytical Technologies

	Zero			Span		
Date	Time	Stack ΔP, Raw (in H_2O)	Diff. (% of span)	Time	Stack ΔP, Raw (in H_2O)	Diff. (% of span)
3/6/2020	09:26:18	0.0087	0.44	09:30:14	2.0000	0.00
3/7/2020	08:30:32	0.0085	0.42	08:35:26	2.0000	0.00
3/8/2020	09:22:05	0.0090	0.45	09:27:59	2.0000	0.00
3/9/2020	06:34:32	0.0069	0.35	06:39:27	2.0000	0.00
3/10/2020	07:40:28	0.0099	0.50	07:44:23	2.0000	0.00
3/11/2020	07:21:31	0.0085	0.42	07:26:26	2.0000	0.00
3/12/2020	07:44:56	0.0099	0.49	07:49:50	2.0000	0.00
	AVG=	0.0088	0.439		2.0000	0.000

MAX Analytical Technologies

Table contains unaveraged concentration values.

Spectrum	Date	Time	Temp (°C)	Pressure (Atm)	DP K-Factor	Stack Velocity (ft/sec)	Volumetric Stack Flow (scfm)	UD.Stack Differential Pressure (in H2O)	UD.Stack Temperature (degrees F)
STACK EMISSIONS_0000021.LAB	3/5/2020	08:30:54	151.2	0.983	0.633	45.686	51721.508	0.883	75.195
STACK EMISSIONS_0000022.LAB	3/5/2020	08:31:53	151.2	0.982	-0.111	Undefined	Undefined	0.014	75.208
STACK EMISSIONS_0000023.LAB	3/5/2020	08:32:52	150.9	0.982	-0.105	Undefined	Undefined	0.015	75.226
STACK EMISSIONS_0000024.LAB	3/5/2020	08:33:51	151.0	0.982	-0.098	Undefined	Undefined	0.015	75.421
STACK EMISSIONS_0000025.LAB	3/5/2020	08:34:50	150.8	0.982	-0.108	Undefined	Undefined	0.014	75.348
STACK EMISSIONS_0000026.LAB	3/5/2020	08:35:49	150.8	0.982	-0.003	Undefined	Undefined	0.247	75.357
STACK EMISSIONS_0000027.LAB	3/5/2020	08:36:48	150.7	0.982	0.324	32.702	37007.779	0.574	75.412
STACK EMISSIONS_0000028.LAB	3/5/2020	08:37:47	150.8	0.983	0.633	45.715	51696.613	0.883	75.794
STACK EMISSIONS_0000029.LAB	3/5/2020	08:38:46	150.2	0.982	0.662	46.736	52825.031	0.912	76.059
STACK EMISSIONS_0000030.LAB	3/5/2020	08:39:45	149.6	0.982	0.667	46.909	53066.581	0.917	75.601
STACK EMISSIONS_0000031.LAB	3/5/2020	08:40:44	149.9	0.982	0.272	30.011	33822.654	0.522	77.622
STACK EMISSIONS_0000032.LAB	3/5/2020	08:41:42	149.9	0.982	1.750	76.197	85699.627	2.000	78.718
STACK EMISSIONS_0000033.LAB	3/5/2020	08:42:41	151.0	0.982	1.750	76.230	85662.014	2.000	79.191
STACK EMISSIONS_0000034.LAB	3/5/2020	08:43:40	151.1	0.982	1.750	76.260	85628.335	2.000	79.615
STACK EMISSIONS_0000035.LAB	3/5/2020	08:44:39	151.4	0.982	1.750	76.256	85632.694	2.000	79.560
STACK EMISSIONS_0000036.LAB	3/5/2020	08:45:38	151.1	0.982	0.696	48.084	54014.445	0.946	79.374
STACK EMISSIONS_0000034.LAB	3/6/2020	09:25:19	150.2	0.995	0.622	45.180	51402.753	0.872	72.555
STACK EMISSIONS_0000035.LAB	3/6/2020	09:26:18	151.6	0.995	-0.108	Undefined	Undefined	0.014	72.643
STACK EMISSIONS_0000036.LAB	3/6/2020	09:27:17	152.2	0.994	-0.186	Undefined	Undefined	0.006	74.148
STACK EMISSIONS_0000037.LAB	3/6/2020	09:28:16	152.1	0.995	-0.188	Undefined	Undefined	0.006	75.107
STACK EMISSIONS_0000038.LAB	3/6/2020	09:29:15	151.9	0.995	-0.170	Undefined	Undefined	0.008	74.243
STACK EMISSIONS_0000039.LAB	3/6/2020	09:30:14	151.7	0.995	1.750	75.874	86063.946	2.000	74.167
STACK EMISSIONS_0000040.LAB	3/6/2020	09:31:13	151.7	0.995	1.750	75.976	85948.114	2.000	75.607

Spectrum	Date	Time	Temp (°C)	Pressure (Atm)	DP K-Factor	Stack Velocity (ft/sec)	Volumetric Stack Flow (scfm)	UD.Stack Differential Pressure (in H2O)	UD.Stack Temperature (degrees F)
STACK EMISSIONS_0000041.LAB	3/6/2020	09:32:12	151.6	0.995	1.750	76.036	85880.840	2.000	76.447
STACK EMISSIONS_0000042.LAB	3/6/2020	09:33:11	151.5	0.995	1.750	76.038	85879.129	2.000	76.468
STACK EMISSIONS_0000043.LAB	3/6/2020	09:34:10	151.5	0.994	1.750	76.040	85875.955	2.000	76.508
STACK EMISSIONS_0000044.LAB	3/6/2020	09:35:08	150.9	0.995	0.617	45.139	50979.711	0.867	76.480
STACK EMISSIONS_0000026.LAB	3/7/2020	08:30:32	151.6	1.001	-0.166	Undefined	Undefined	0.008	74.655
STACK EMISSIONS_0000027.LAB	3/7/2020	08:31:31	150.4	1.000	-0.169	Undefined	Undefined	0.008	74.991
STACK EMISSIONS_0000028.LAB	3/7/2020	08:32:30	150.3	1.001	-0.164	Undefined	Undefined	0.009	74.185
STACK EMISSIONS_0000029.LAB	3/7/2020	08:33:29	150.3	1.001	-0.161	Undefined	Undefined	0.009	73.831
STACK EMISSIONS_0000030.LAB	3/7/2020	08:34:27	150.2	1.001	0.341	33.476	38003.503	0.591	73.718
STACK EMISSIONS_0000031.LAB	3/7/2020	08:35:26	151.1	1.001	1.750	75.926	86005.236	2.000	74.896
STACK EMISSIONS_0000032.LAB	3/7/2020	08:36:25	151.0	1.001	1.750	76.043	85872.779	2.000	76.548
STACK EMISSIONS_0000033.LAB	3/7/2020	08:37:24	150.9	1.001	1.750	76.109	85798.616	2.000	77.476
STACK EMISSIONS_0000034.LAB	3/7/2020	08:38:23	151.0	1.001	1.750	76.141	85762.335	2.000	77.930
STACK EMISSIONS_0000035.LAB	3/7/2020	08:39:22	151.1	1.001	0.396	36.208	40783.473	0.646	77.924
STACK EMISSIONS_0000052.LAB	3/8/2020	09:21:06	150.4	0.990	0.633	45.771	51634.842	0.883	77.097
STACK EMISSIONS_0000053.LAB	3/8/2020	09:22:05	150.9	0.991	-0.113	Undefined	Undefined	0.014	77.106
STACK EMISSIONS_0000054.LAB	3/8/2020	09:23:04	150.3	0.991	-0.176	Undefined	Undefined	0.007	77.918
STACK EMISSIONS_0000055.LAB	3/8/2020	09:24:03	150.2	0.991	-0.169	Undefined	Undefined	0.008	79.093
STACK EMISSIONS_0000056.LAB	3/8/2020	09:25:02	150.1	0.991	-0.174	Undefined	Undefined	0.008	79.457
STACK EMISSIONS_0000057.LAB	3/8/2020	09:26:01	150.2	0.990	-0.168	Undefined	Undefined	0.008	79.753
STACK EMISSIONS_0000058.LAB	3/8/2020	09:27:00	150.7	0.991	0.427	37.669	42293.225	0.677	79.652
STACK EMISSIONS_0000059.LAB	3/8/2020	09:27:59	150.7	0.991	1.750	76.265	85622.766	2.000	79.685
STACK EMISSIONS_0000060.LAB	3/8/2020	09:28:57	150.4	0.991	1.750	76.274	85612.596	2.000	79.814
STACK EMISSIONS_0000061.LAB	3/8/2020	09:29:56	150.2	0.991	1.750	76.264	85624.459	2.000	79.664
STACK EMISSIONS_0000062.LAB	3/8/2020	09:30:55	150.3	0.990	1.750	76.258	85630.999	2.000	79.582

Spectrum	Date	Time	Temp (°C)	Pressure (Atm)	DP K-Factor	Stack Velocity (ft/sec)	Volumetric Stack Flow (scfm)	UD.Stack Differential Pressure (in H2O)	UD.Stack Temperature (degrees F)
STACK EMISSIONS_0000063.LAB	3/8/2020	09:31:54	150.4	0.991	1.750	76.251	85639.234	2.000	79.478
ZERO DIRECT_0000064.LAB	3/8/2020	09:33:00	150.4	0.991	1.750	76.248	85642.627	2.000	79.435
ZERO DIRECT_0000065.LAB	3/8/2020	09:33:14	150.3	0.990	0.584	44.035	49475.675	0.834	79.280
STACK EMISSIONS_0000053.LAB	3/9/2020	06:33:34	150.2	0.986	0.689	47.877	53670.268	0.939	80.507
STACK EMISSIONS_0000054.LAB	3/9/2020	06:34:32	150.5	0.986	-0.193	Undefined	Undefined	0.006	80.302
STACK EMISSIONS_0000055.LAB	3/9/2020	06:35:31	150.8	0.986	-0.182	Undefined	Undefined	0.007	81.117
STACK EMISSIONS_0000056.LAB	3/9/2020	06:36:30	150.9	0.986	-0.174	Undefined	Undefined	0.008	82.088
STACK EMISSIONS_0000057.LAB	3/9/2020	06:37:29	150.9	0.986	-0.174	Undefined	Undefined	0.008	82.283
STACK EMISSIONS_0000058.LAB	3/9/2020	06:38:28	150.8	0.986	0.259	29.395	32848.053	0.509	82.213
STACK EMISSIONS_0000059.LAB	3/9/2020	06:39:27	150.5	0.985	1.750	76.453	85412.390	2.000	82.347
STACK EMISSIONS_0000060.LAB	3/9/2020	06:40:26	150.3	0.986	1.750	76.450	85415.756	2.000	82.305
STACK EMISSIONS_0000061.LAB	3/9/2020	06:41:25	150.3	0.986	1.750	76.461	85403.981	2.000	82.454
STACK EMISSIONS_0000062.LAB	3/9/2020	06:42:24	150.0	0.986	1.750	76.458	85407.346	2.000	82.411
STACK EMISSIONS_0000063.LAB	3/9/2020	06:43:23	150.0	0.986	1.750	76.455	85409.987	2.000	82.378
ZERO DIRECT_0000064.LAB	3/9/2020	06:44:28	150.0	0.986	0.603	44.881	50159.103	0.853	82.152
STACK EMISSIONS_0000044.LAB	3/10/2020	07:39:29	150.3	0.988	0.649	46.201	52377.555	0.899	74.450
STACK EMISSIONS_0000045.LAB	3/10/2020	07:40:28	151.2	0.988	-0.111	Undefined	Undefined	0.014	75.284
STACK EMISSIONS_0000046.LAB	3/10/2020	07:41:27	151.9	0.988	-0.165	Undefined	Undefined	0.009	75.824
STACK EMISSIONS_0000047.LAB	3/10/2020	07:42:25	152.1	0.988	-0.176	Undefined	Undefined	0.007	76.896
STACK EMISSIONS_0000048.LAB	3/10/2020	07:43:24	151.9	0.988	0.219	26.946	30369.305	0.469	77.598
STACK EMISSIONS_0000049.LAB	3/10/2020	07:44:23	151.3	0.988	1.750	76.111	85795.936	2.000	77.509
STACK EMISSIONS_0000050.LAB	3/10/2020	07:45:22	150.2	0.988	1.750	76.043	85873.268	2.000	76.541
STACK EMISSIONS_0000051.LAB	3/10/2020	07:46:21	150.0	0.989	1.750	75.955	85972.123	2.000	75.308
STACK EMISSIONS_0000052.LAB	3/10/2020	07:47:20	150.0	0.989	1.750	75.917	86015.546	2.000	74.768
STACK EMISSIONS_0000053.LAB	3/10/2020	07:48:19	150.1	0.988	0.617	45.089	51041.726	0.867	75.241

Spectrum	Date	Time	Temp (°C)	Pressure (Atm)	DP K-Factor	Stack Velocity (ft/sec)	Volumetric Stack Flow (scfm)	UD.Stack Differential Pressure (in H2O)	UD.Stack Temperature (degrees F)
STACK EMISSIONS_0000020.LAB	3/11/2020	07:20:32	150.1	0.985	0.586	44.007	49705.911	0.836	76.441
STACK EMISSIONS_0000021.LAB	3/11/2020	07:21:31	150.1	0.985	-0.116	Undefined	Undefined	0.013	76.355
STACK EMISSIONS_0000022.LAB	3/11/2020	07:22:30	151.1	0.985	-0.183	Undefined	Undefined	0.007	77.250
STACK EMISSIONS_0000023.LAB	3/11/2020	07:23:29	151.3	0.985	-0.177	Undefined	Undefined	0.007	77.936
STACK EMISSIONS_0000024.LAB	3/11/2020	07:24:28	151.5	0.985	-0.186	Undefined	Undefined	0.006	77.433
STACK EMISSIONS_0000025.LAB	3/11/2020	07:25:27	151.3	0.985	0.253	28.954	32662.506	0.503	77.109
STACK EMISSIONS_0000026.LAB	3/11/2020	07:26:26	150.4	0.985	1.750	76.095	85814.699	2.000	77.274
STACK EMISSIONS_0000027.LAB	3/11/2020	07:27:24	149.9	0.985	1.750	76.062	85851.780	2.000	76.810
STACK EMISSIONS_0000028.LAB	3/11/2020	07:28:23	149.9	0.985	1.750	76.039	85876.931	2.000	76.496
STACK EMISSIONS_0000029.LAB	3/11/2020	07:29:22	150.0	0.984	0.872	53.686	60614.134	1.122	76.645
STACK EMISSIONS_0000030.LAB	3/11/2020	07:30:21	149.9	0.985	0.569	43.432	48874.885	0.819	78.428
STACK EMISSIONS_0000031.LAB	3/11/2020	07:31:20	150.1	0.985	0.690	47.809	53884.851	0.940	77.579
STACK EMISSIONS_0000032.LAB	3/11/2020	07:32:19	150.1	0.985	0.551	42.699	48186.266	0.801	76.902
STACK EMISSIONS_0000033.LAB	3/11/2020	07:33:18	150.0	0.985	0.603	44.651	50422.582	0.853	76.544
STACK EMISSIONS_0000034.LAB	3/11/2020	07:34:17	150.0	0.985	0.556	42.843	48400.775	0.806	76.325
STACK EMISSIONS_0000035.LAB	3/11/2020	07:35:16	150.0	0.985	0.617	45.151	51017.695	0.867	76.233
STACK EMISSIONS_0000036.LAB	3/11/2020	07:36:14	150.0	0.985	0.583	43.888	49597.760	0.833	76.157
STACK EMISSIONS_0000037.LAB	3/11/2020	07:37:13	150.0	0.985	0.649	46.285	52311.584	0.899	76.102
STACK EMISSIONS_0000038.LAB	3/11/2020	07:38:12	150.0	0.985	0.653	46.430	52483.977	0.903	76.013
STACK EMISSIONS_0000039.LAB	3/11/2020	07:39:11	150.0	0.985	0.595	44.326	50105.554	0.845	76.010
STACK EMISSIONS_0000040.LAB	3/11/2020	07:40:10	149.9	0.985	0.622	45.299	51201.004	0.872	76.065
STACK EMISSIONS_0000041.LAB	3/11/2020	07:41:09	150.1	0.985	0.580	43.772	49481.669	0.830	75.992
STACK EMISSIONS_0000042.LAB	3/11/2020	07:42:08	150.0	0.986	0.562	43.068	48687.133	0.812	75.974
STACK EMISSIONS_0000043.LAB	3/11/2020	07:43:07	150.0	0.985	0.649	46.289	52332.567	0.899	75.934
STACK EMISSIONS_0000044.LAB	3/11/2020	07:44:06	150.0	0.986	0.685	47.555	53758.797	0.935	75.977
STACK EMISSIONS_0000045.LAB	3/11/2020	07:45:04	150.0	0.985	0.594	44.266	50041.725	0.844	75.968

Spectrum	Date	Time	Temp (°C)	Pressure (Atm)	DP K-Factor	Stack Velocity (ft/sec)	Volumetric Stack Flow (scfm)	UD.Stack Differential Pressure (in H2O)	UD.Stack Temperature (degrees F)
STACK EMISSIONS_0000046.LAB	3/11/2020	07:46:03	150.0	0.986	0.566	43.222	48827.411	0.816	76.349
STACK EMISSIONS_0000047.LAB	3/11/2020	07:47:02	150.5	0.985	0.619	45.257	51037.908	0.869	77.271
STACK EMISSIONS_0000033.LAB	3/12/2020	07:43:57	150.1	0.979	0.559	42.958	48553.191	0.809	76.077
STACK EMISSIONS_0000034.LAB	3/12/2020	07:44:56	150.3	0.979	-0.116	Undefined	Undefined	0.013	76.013
STACK EMISSIONS_0000035.LAB	3/12/2020	07:45:55	151.1	0.979	-0.111	Undefined	Undefined	0.014	76.047
STACK EMISSIONS_0000036.LAB	3/12/2020	07:46:54	150.3	0.979	-0.178	Undefined	Undefined	0.007	78.226
STACK EMISSIONS_0000037.LAB	3/12/2020	07:47:53	150.8	0.979	-0.183	Undefined	Undefined	0.007	78.083
STACK EMISSIONS_0000038.LAB	3/12/2020	07:48:51	150.4	0.979	-0.168	Undefined	Undefined	0.008	77.228
STACK EMISSIONS_0000039.LAB	3/12/2020	07:49:50	150.9	0.979	1.750	76.084	85826.891	2.000	77.121
STACK EMISSIONS_0000040.LAB	3/12/2020	07:50:49	150.3	0.979	1.750	76.071	85841.042	2.000	76.944
STACK EMISSIONS_0000041.LAB	3/12/2020	07:51:48	150.2	0.979	1.750	76.048	85867.651	2.000	76.612
STACK EMISSIONS_0000042.LAB	3/12/2020	07:52:47	150.0	0.979	1.750	76.036	85880.595	2.000	76.450
STACK EMISSIONS_0000043.LAB	3/12/2020	07:53:46	150.0	0.979	1.750	76.030	85887.192	2.000	76.367
STACK EMISSIONS_0000044.LAB	3/12/2020	07:54:45	150.0	0.979	1.750	76.025	85893.792	2.000	76.285
STACK EMISSIONS_0000045.LAB	3/12/2020	07:55:44	150.0	0.978	0.373	35.119	39650.876	0.623	76.645

MAX
Analytical Technologies

Start Date:	2/5/2020
End Date:	2/11/2020
Sample Description:	Common Stack Emissions
Quant Method:	EMS-10 Ethylene Oxide [Medline] (Modified)
Results Averaging:	Off
Dataset Comments:	7-Day Calibration Drift Test

Certified Calibration Cylinder

Bottle	Expiration	Gas	Certified Conc (ppm)	Analytical Uncertainty
EB0113081	15-Oct-20	Ethylene Oxide	2.103	±5%
		Ethane	503.1	±2%

7-Day Calibration Drift Test

Date	Start Time	EO Zero (ppb)	EO Span (ppb)	Calibration Error (%)
2/5/2020	00:01:59	-0.952	2246	6.793%
2/6/2020	00:01:04	0.010	2248	6.873%
2/7/2020	09:52:23	0.014	2251	7.057%
2/8/2020	00:01:59	-0.883	2247	6.844%
2/9/2020	00:01:59	-0.018	2247	6.844%
2/10/2020	00:01:59	-1.409	2246	6.823%
2/11/2020	00:01:59	0.606	2248	6.873%
			Calibration Drift (%)	0.080%

NOTE: On Feb 7, 2020, calibration sequence was not executed at midnight due to a power outage. Once power was restored, calibrations were performed at 9:50am. No other maintenance, adjustments or repairs were made.

$CD = |CE_{final} - CE_i|$

MAX Analytical Technologies

Table contains unaveraged concentration values.

Spectrum	Date	Time	Temp (°C)	Pressure (Atm)	Ethane [150C] [74-84-0] [2x8cm-1] [Aromatics Filter]	Ethylene Oxide [150C] [75-21-8] [2x8cm-1] [Aromatics Filter]	Methane [150C] [74-82-8] [2x8cm-1] [Aromatics Filter] [SN110383419]	Water [150C] [7732-18-5] [2x8cm-1] [Aromatics Filter] [SN110383419]
ZERO DIRECT_0000001.LAB	2/5/2020	00:01:00	150.3	0.983	0.208	0.004	0.209	661.758
ZERO DIRECT_0000002.LAB	2/5/2020	00:01:59	150.3	0.983	0.005	-0.001	0.000	4.489
ZERO DIRECT_0000003.LAB	2/5/2020	00:02:58	150.3	0.983	-0.003	-0.001	0.000	2.362
ZERO DIRECT_0000004.LAB	2/5/2020	00:03:57	150.3	0.983	-0.001	-0.001	0.001	2.037
FILTER SPECTRUM_0000005.LAB	2/5/2020	00:04:56	150.3	0.983	0.000	0.000	0.000	0.000
EO DIRECT_0000022.LAB	2/5/2020	00:09:13	150.3	0.983	504.933	2.245	-0.465	160.544
EO DIRECT_0000023.LAB	2/5/2020	00:09:28	150.3	0.983	504.982	2.242	-0.474	163.666
EO DIRECT_0000024.LAB	2/5/2020	00:09:42	150.3	0.983	505.074	2.244	-0.481	162.798
EO DIRECT_0000025.LAB	2/5/2020	00:09:57	150.3	0.983	505.084	2.245	-0.492	161.899
EO DIRECT_0000026.LAB	2/5/2020	00:10:12	150.3	0.983	505.213	2.248	-0.495	162.089
EO DIRECT_0000027.LAB	2/5/2020	00:10:27	150.3	0.983	505.326	2.247	-0.502	162.369
EO DIRECT_0000028.LAB	2/5/2020	00:10:41	150.3	0.983	505.295	2.247	-0.504	159.176
EO DIRECT_0000029.LAB	2/5/2020	00:10:56	150.3	0.983	505.330	2.250	-0.509	163.944
ZERO DIRECT_0000001.LAB	2/6/2020	00:01:04	150.3	0.971	0.120	0.001	0.152	220.983
ZERO DIRECT_0000002.LAB	2/6/2020	00:02:03	150.3	0.971	0.005	0.000	0.003	3.729
ZERO DIRECT_0000003.LAB	2/6/2020	00:03:01	150.3	0.971	0.004	-0.001	0.002	2.186
ZERO DIRECT_0000004.LAB	2/6/2020	00:04:00	150.2	0.971	0.008	0.000	0.003	-0.130
FILTER SPECTRUM_0000005.LAB	2/6/2020	00:04:59	150.3	0.971	0.000	0.000	0.000	0.000
EO DIRECT_0000022.LAB	2/6/2020	00:09:12	150.3	0.971	504.161	2.242	-0.459	158.654
EO DIRECT_0000023.LAB	2/6/2020	00:09:27	150.3	0.971	504.288	2.246	-0.474	155.912

Spectrum	Date	Time	Temp (°C)	Pressure (Atm)	Ethane [150C] [74-84-0] [2x8cm-1] [Aromatics Filter]	Ethylene Oxide [150C] [75-21-8] [2x8cm-1] [Aromatics Filter]	Methane [150C] [74-82-8] [2x8cm-1] [Aromatics Filter] [SN110383419]	Water [150C] [7732-18-5] [2x8cm-1] [Aromatics Filter] [SN110383419]
EO DIRECT_0000024.LAB	2/6/2020	00:09:42	150.3	0.971	504.311	2.248	-0.478	157.084
EO DIRECT_0000025.LAB	2/6/2020	00:09:57	150.3	0.971	504.312	2.246	-0.497	157.491
EO DIRECT_0000026.LAB	2/6/2020	00:10:11	150.3	0.971	504.232	2.250	-0.495	157.068
EO DIRECT_0000027.LAB	2/6/2020	00:10:26	150.3	0.971	504.321	2.250	-0.501	157.344
EO DIRECT_0000028.LAB	2/6/2020	00:10:41	150.3	0.971	504.335	2.251	-0.504	156.210
EO DIRECT_0000029.LAB	2/6/2020	00:10:55	150.3	0.971	504.463	2.248	-0.506	156.677
ZERO DIRECT_0000001.LAB	2/7/2020	09:52:23	150.0	0.968	0.006	0.000	0.001	1.293
ZERO DIRECT_0000002.LAB	2/7/2020	09:53:22	149.9	0.968	0.005	0.001	0.001	0.969
ZERO DIRECT_0000003.LAB	2/7/2020	09:54:21	150.2	0.968	0.005	-0.001	-0.002	0.741
ZERO DIRECT_0000004.LAB	2/7/2020	09:55:19	151.8	0.968	0.007	0.000	-0.002	0.558
FILTER SPECTRUM_0000005.LAB	2/7/2020	09:56:18	150.5	0.968	0.000	0.000	0.000	0.000
EO DIRECT_0000022.LAB	2/7/2020	10:00:37	149.8	0.969	505.296	2.246	-0.474	154.496
EO DIRECT_0000023.LAB	2/7/2020	10:00:52	149.8	0.969	505.285	2.251	-0.480	158.284
EO DIRECT_0000024.LAB	2/7/2020	10:01:07	149.8	0.969	505.330	2.251	-0.493	158.801
EO DIRECT_0000025.LAB	2/7/2020	10:01:21	149.8	0.969	505.344	2.251	-0.498	155.486
EO DIRECT_0000026.LAB	2/7/2020	10:01:36	149.8	0.969	505.395	2.252	-0.500	155.145
EO DIRECT_0000027.LAB	2/7/2020	10:01:51	149.8	0.969	505.387	2.254	-0.505	156.791
EO DIRECT_0000028.LAB	2/7/2020	10:02:05	149.8	0.969	505.318	2.253	-0.508	155.200
EO DIRECT_0000029.LAB	2/7/2020	10:02:20	149.8	0.969	505.378	2.252	-0.513	157.105
ZERO DIRECT_0000001.LAB	2/8/2020	00:01:00	150.1	0.975	0.306	0.006	0.536	593.731
ZERO DIRECT_0000002.LAB	2/8/2020	00:01:59	150.2	0.975	0.001	-0.001	0.004	2.401

Spectrum	Date	Time	Temp (°C)	Pressure (Atm)	Ethane [150C] [74-84-0] [2x8cm-1] [Aromatics Filter]	Ethylene Oxide [150C] [75-21-8] [2x8cm-1] [Aromatics Filter]	Methane [150C] [74-82-8] [2x8cm-1] [Aromatics Filter] [SN110383419]	Water [150C] [7732-18-5] [2x8cm-1] [Aromatics Filter] [SN110383419]
ZERO DIRECT_0000003.LAB	2/8/2020	00:02:58	150.1	0.975	0.001	-0.001	0.003	1.890
ZERO DIRECT_0000004.LAB	2/8/2020	00:03:57	150.1	0.975	0.003	-0.001	0.000	0.544
FILTER SPECTRUM_0000005.LAB	2/8/2020	00:04:56	150.1	0.975	0.000	0.000	0.000	0.000
EO DIRECT_0000022.LAB	2/8/2020	00:09:12	150.1	0.976	504.746	2.243	-0.468	150.811
EO DIRECT_0000023.LAB	2/8/2020	00:09:27	150.1	0.976	504.755	2.245	-0.473	153.168
EO DIRECT_0000024.LAB	2/8/2020	00:09:42	150.1	0.976	504.741	2.242	-0.487	152.553
EO DIRECT_0000025.LAB	2/8/2020	00:09:57	150.1	0.976	504.764	2.247	-0.490	154.239
EO DIRECT_0000026.LAB	2/8/2020	00:10:11	150.1	0.976	504.705	2.247	-0.500	151.873
EO DIRECT_0000027.LAB	2/8/2020	00:10:26	150.1	0.976	504.742	2.248	-0.502	150.728
EO DIRECT_0000028.LAB	2/8/2020	00:10:41	150.1	0.976	504.803	2.250	-0.504	153.241
EO DIRECT_0000029.LAB	2/8/2020	00:10:55	150.2	0.976	504.905	2.249	-0.510	153.318
ZERO DIRECT_0000001.LAB	2/9/2020	00:01:00	150.1	0.984	0.409	0.009	1.681	653.538
ZERO DIRECT_0000002.LAB	2/9/2020	00:01:59	150.2	0.984	0.000	0.000	0.003	4.835
ZERO DIRECT_0000003.LAB	2/9/2020	00:02:58	150.1	0.984	0.000	0.000	0.002	2.518
ZERO DIRECT_0000004.LAB	2/9/2020	00:03:57	150.1	0.984	-0.004	0.000	-0.001	0.928
FILTER SPECTRUM_0000005.LAB	2/9/2020	00:04:56	150.1	0.984	0.000	0.000	0.000	0.000
EO DIRECT_0000022.LAB	2/9/2020	00:09:12	150.0	0.985	504.964	2.241	-0.471	164.190
EO DIRECT_0000023.LAB	2/9/2020	00:09:27	150.1	0.985	505.032	2.245	-0.484	164.583
EO DIRECT_0000024.LAB	2/9/2020	00:09:42	150.2	0.985	505.194	2.247	-0.489	163.347
EO DIRECT_0000025.LAB	2/9/2020	00:09:56	150.2	0.985	505.199	2.247	-0.490	163.957
EO DIRECT_0000026.LAB	2/9/2020	00:10:11	150.1	0.985	505.079	2.249	-0.501	162.886
EO DIRECT_0000027.LAB	2/9/2020	00:10:26	150.1	0.985	505.214	2.250	-0.505	161.693

Spectrum	Date	Time	Temp (°C)	Pressure (Atm)	Ethane [150C] [74-84-0] [2x8cm-1] [Aromatics Filter]	Ethylene Oxide [150C] [75-21-8] [2x8cm-1] [Aromatics Filter]	Methane [150C] [74-82-8] [2x8cm-1] [Aromatics Filter] [SN110383419]	Water [150C] [7732-18-5] [2x8cm-1] [Aromatics Filter] [SN110383419]
EO DIRECT_0000028.LAB	2/9/2020	00:10:41	150.1	0.985	505.324	2.248	-0.512	162.799
EO DIRECT_0000029.LAB	2/9/2020	00:10:55	150.2	0.985	505.347	2.250	-0.512	164.070
ZERO DIRECT_0000001.LAB	2/10/2020	00:01:00	150.2	0.977	0.295	0.011	1.625	796.372
ZERO DIRECT_0000002.LAB	2/10/2020	00:01:59	150.3	0.977	-0.002	-0.003	0.001	4.261
ZERO DIRECT_0000003.LAB	2/10/2020	00:02:58	150.2	0.977	0.003	-0.001	0.003	1.540
ZERO DIRECT_0000004.LAB	2/10/2020	00:03:57	150.2	0.977	-0.005	-0.001	0.002	0.233
FILTER SPECTRUM_0000005.LAB	2/10/2020	00:04:56	150.2	0.977	0.000	0.000	0.000	0.000
EO DIRECT_0000022.LAB	2/10/2020	00:09:13	150.1	0.977	504.773	2.242	-0.471	163.676
EO DIRECT_0000023.LAB	2/10/2020	00:09:28	150.1	0.977	504.792	2.244	-0.478	161.732
EO DIRECT_0000024.LAB	2/10/2020	00:09:42	150.2	0.977	504.941	2.246	-0.487	162.344
EO DIRECT_0000025.LAB	2/10/2020	00:09:57	150.1	0.977	504.844	2.249	-0.493	161.007
EO DIRECT_0000026.LAB	2/10/2020	00:10:12	150.2	0.977	505.058	2.247	-0.504	159.296
EO DIRECT_0000027.LAB	2/10/2020	00:10:26	150.1	0.977	505.022	2.246	-0.502	161.238
EO DIRECT_0000028.LAB	2/10/2020	00:10:41	150.1	0.977	505.034	2.248	-0.514	158.393
EO DIRECT_0000029.LAB	2/10/2020	00:10:56	150.2	0.977	505.089	2.250	-0.512	161.171
ZERO DIRECT_0000001.LAB	2/11/2020	00:01:00	150.2	0.982	0.093	0.006	1.114	578.189
ZERO DIRECT_0000002.LAB	2/11/2020	00:01:59	150.1	0.982	0.003	0.001	0.000	4.046
ZERO DIRECT_0000003.LAB	2/11/2020	00:02:58	150.1	0.982	0.004	0.000	0.001	1.613
ZERO DIRECT_0000004.LAB	2/11/2020	00:03:57	150.2	0.982	0.003	0.001	-0.003	1.617
FILTER SPECTRUM_0000005.LAB	2/11/2020	00:04:56	150.1	0.982	0.000	0.000	0.000	0.000
EO DIRECT_0000022.LAB	2/11/2020	00:09:13	150.1	0.983	505.104	2.242	-0.465	163.960

Spectrum	Date	Time	Temp (°C)	Pressure (Atm)	Ethane [150C] [74-84-0] [2x8cm-1] [Aromatics Filter]	Ethylene Oxide [150C] [75-21-8] [2x8cm-1] [Aromatics Filter]	Methane [150C] [74-82-8] [2x8cm-1] [Aromatics Filter] [SN110383419]	Water [150C] [7732-18-5] [2x8cm-1] [Aromatics Filter] [SN110383419]
EO DIRECT_0000023.LAB	2/11/2020	00:09:27	150.1	0.983	505.260	2.245	-0.475	161.277
EO DIRECT_0000024.LAB	2/11/2020	00:09:42	150.1	0.983	505.338	2.251	-0.483	161.161
EO DIRECT_0000025.LAB	2/11/2020	00:09:57	150.0	0.983	505.138	2.247	-0.493	164.194
EO DIRECT_0000026.LAB	2/11/2020	00:10:12	150.1	0.983	505.220	2.249	-0.499	160.782
EO DIRECT_0000027.LAB	2/11/2020	00:10:26	150.1	0.983	505.193	2.249	-0.505	155.534
EO DIRECT_0000028.LAB	2/11/2020	00:10:41	150.2	0.983	505.195	2.247	-0.505	159.732
EO DIRECT_0000029.LAB	2/11/2020	00:10:56	150.1	0.983	505.063	2.250	-0.507	159.169

APPENDIX F
CALIBRATION DATA

MONTROSE AIR QUALITY SERVICES

EPA Method 205 Field Datasheet

Project Information

Date 2/13/2020 Project # `0928ET

Customer / Facility Medline Waukegan

Unit ID / Sample Location ETO Abatement System Common Stack and Inlets #2 and #3

Operator William C. James

Notes:

Equipment Information

Calibration gas diluter ID/SN Environics SN 5701 Calibration expiration date 1/20/2021

Audited dilution device (DD) ☑ DD1 ☑ DD2 ☑ DD 3 ☐ DD 4 ☐ DD 5 ☐ DD 6 ☐ DD 7 ☐ DD 8

DDs used to generate cal gases ☑ DD1 ☑ DD2 ☑ DD 3 ☐ DD 4 ☐ DD 5 ☐ DD 6 ☐ DD 7 ☐ DD 8

Total flow rate, LPM 7 Analyzer ID/SN Servomex 01440D1/4214 Analyte O2 Span value 25

Calibration Gas Information

	Tag Value	Units (ppm or %)	Cylinder ID	Pressure (PSI)	Expiration Date
Dilution Level 1 Cylinder	22.40	%	EB0033448	1900	6/19/2027
Dilution Level 2 Cylinder	22.40	%	EB0033448	1900	6/19/2027
Direct Inject Cylinder*	12.04	%	CC173097	1950	1/28/2027

Performance Data

	Predicted Diluted Value**	Units (ppm or %)	Analyzer Response						
			Time	Injection 1	Time	Injection 2	Time	Injection 3	Average
Dilution Level 1	12.04	%	16:40	12.10	16:56	12.14	17:12	12.17	12.14
Dilution Level 2	6.00	%	16:42	6.01	16:58	6.04	17:15	6.05	6.03
Direct Inject Gas	12.04	%	16:53	12.00	17:10	12.05	17:25	12.08	12.04

Calculations

DI	Injection 1	Injection 2	Injection 3
Dilution Level 1	0.30%	0.03%	0.27%
Dilution Level 2	0.39%	0.11%	0.28%
Direct Inject	0.36%	0.06%	0.30%

DL	Dilution Level 1	Dilution Level 2	Direct Inject
	0.80%	0.56%	0.03%

DI - Difference of each injection from the average analyzer response

DI% = (I - R / I) * 100

DL - Difference from predicted for each dilution level

DL% = (P - R / P) * 100

I - Each individual injection

R - Average Response

P - Predicted diluted value

DI must be within 2% of the average instrument response for that dilution.

DL must be within 2% of predicted value.

* The Direct Inject Gas must be independent of the Dilution Level gases.

** One of the Dilution Levels must be within 10% of the Direct Inject gas tag value

All injection responses must be within 2% of the average instrument response for that dilution.

For each level of dilution the average concentration output from the analyzer must be within 2% of the predicted value.

QA/QC Check: Completeness ___ Legibility ___ Accuracy ___ Specifications ___

Checked by: _____ Team Leader: _____

001AS-QMS-WB-EPA205

MONTROSE AIR QUALITY SERVICES

EPA Method 205 Field Datasheet

Project Information

Date 2/13/2020 Project #

Customer / Facility Medline Waukegan

Unit ID / Sample Location ETO Abatement System Common Stack and Inlets #2 and #3

Operator William C. James

Notes:

Equipment Information

Calibration gas diluter ID/SN Environics SN 5701 Calibration expiration date 1/20/2021

Audited dilution device (DD) ☑ DD1 ☑ DD2 ☑ DD 3 ☐ DD 4 ☐ DD 5 ☐ DD 6 ☐ DD 7 ☐ DD 8

DDs used to generate cal gases ☑ DD1 ☑ DD2 ☑ DD 3 ☐ DD 4 ☐ DD 5 ☐ DD 6 ☐ DD 7 ☐ DD 8

Total flow rate, LPM 7 Analyzer ID/SN Servomex 01440D1/4214 Analyte CO2 Span value 12

Calibration Gas Information

	Tag Value	Units (ppm or %)	Cylinder ID	Pressure (PSI)	Expiration Date
Dilution Level 1 Cylinder	22.40	%	EB0033448	1900	6/19/2027
Dilution Level 2 Cylinder	22.40	%	EB0033448	1900	6/19/2027
Direct Inject Cylinder*	3.958	%	CC173097	1950	1/28/2027

Performance Data

	Predicted Diluted Value**	Units (ppm or %)	Analyzer Response						
			Time	Injection 1	Time	Injection 2	Time	Injection 3	Average
Dilution Level 1	3.95	%	16:43	3.97	17:00	3.96	17:16	3.94	3.96
Dilution Level 2	2.00	%	16:45	2.01	17:02	2.00	17:18	2.03	2.01
Direct Inject Gas	3.96	%	16:53	3.99	17:10	4.01	17:25	3.95	3.98

Calculations

DI	Injection 1	Injection 2	Injection 3
Dilution Level 1	0.34%	0.08%	0.42%
Dilution Level 2	0.17%	0.67%	0.82%
Direct Inject	0.17%	0.67%	0.84%

DL	Dilution Level 1	Dilution Level 2	Direct Inject
	0.17%	0.67%	0.64%

DI - Difference of each injection from the average analyzer response

DI% = (I - R / I) * 100

DL - Difference from predicted for each dilution level

DL% = (P - R / P) * 100

I - Each individual injection

R - Average Response

P - Predicted diluted value

DI must be within 2% of the average instrument response for that dilution.

DL must be within 2% of predicted value.

* The Direct Inject Gas must be independent of the Dilution Level gases.

** One of the Dilution Levels must be within 10% of the Direct Inject gas tag value

All injection responses must be within 2% of the average instrument response for that dilution.

For each level of dilution the average concentration output from the analyzer must be within 2% of the predicted value.

QA/QC Check: Completeness ___ Legibility ___ Accuracy ___ Specifications ___

Checked by: _____ Team Leader: _____

001AS-QMS-WB-EPA205

MONTROSE AIR QUALITY SERVICES

EPA Method 205 Field Datasheet

Project Information

Date 2/13/2020 Project #

Customer / Facility Medline Waukegan

Unit ID / Sample Location ETO Abatement System Common Stack and Inlets #2 and #3

Operator William C. James

Notes:

Equipment Information

Calibration gas diluter ID/SN Environics SN 5701 Calibration expiration date 1/20/2021

Audited dilution device (DD) ☑ DD1 ☐ DD2 ☑ DD 3 ☑ DD 4 ☐ DD 5 ☐ DD 6 ☐ DD 7 ☐ DD 8

DDs used to generate cal gases ☑ DD1 ☐ DD2 ☑ DD 3 ☑ DD 4 ☐ DD 5 ☐ DD 6 ☐ DD 7 ☐ DD 8

Total flow rate, LPM 7 Analyzer ID/SN Teco 48H-122421 Analyte CO Span value 30

Calibration Gas Information

	Tag Value	Units (ppm or %)	Cylinder ID	Pressure (PSI)	Expiration Date
Dilution Level 1 Cylinder	907.00	ppm	EB0019274	1800	8/26/2024
Dilution Level 2 Cylinder	907.00	ppm	EB0019274	1800	8/26/2024
Direct Inject Cylinder*	18.28	ppm	CC173097	1950	1/28/2027

Performance Data

	Predicted Diluted Value**	Units (ppm or %)	Analyzer Response						
			Time	Injection 1	Time	Injection 2	Time	Injection 3	Average
Dilution Level 1	10.00	ppm	16:47	9.97	17:05	9.92	17:21	9.81	9.90
Dilution Level 2	18.28	ppm	16:49	18.26	17:07	18.00	17:23	18.38	18.21
Direct Inject Gas	18.28	ppm	16:53	18.19	17:10	18.08	17:25	17.99	18.09

Calculations

DI	Injection 1	Injection 2	Injection 3
Dilution Level 1	0.70%	0.20%	0.92%
Dilution Level 2	0.26%	1.19%	0.91%
Direct Inject	0.57%	0.04%	0.54%

DL	Dilution Level 1	Dilution Level 2	Direct Inject
	1.00%	0.36%	1.06%

DI - Difference of each injection from the average analyzer response

DI% = (I - R / I) * 100

DL - Difference from predicted for each dilution level

DL% = (P - R / P) * 100

I - Each individual injection

R - Average Response

P - Predicted diluted value

DI must be within 2% of the average instrument response for that dilution.

DL must be within 2% of predicted value.

* The Direct Inject Gas must be independent of the Dilution Level gases.

** One of the Dilution Levels must be within 10% of the Direct Inject gas tag value

All injection responses must be within 2% of the average instrument response for that dilution.

For each level of dilution the average concentration output from the analyzer must be within 2% of the predicted value.

QA/QC Check: Completeness ___ Legibility ___ Accuracy ___ Specifications ___

Checked by: _____ Team Leader: _____

001AS-QMS-WB-EPA205

RM FIELD DATA

Cliant	Medline Waukegan
Location	Waukegan, Illinois
Source	ETO Abatemant System Common Steck and Inlets #2 and #3
Data	02/13/20

Channal No:	**0**	**1**	**4**		
Units	**% v db**	**% v db**	**ppm v db**		
Time	**O2**	**CO2**	**CO**	**COMMENTS**	
2/13/20 15:34	20.96	0.05	0.27		
2/13/20 15:35	20.96	0.05	0.15		
2/13/20 15:35	20.96	0.05	0.34		
2/13/20 15:35	20.96	0.05	0.37		
2/13/20 15:35	20.98	0.06	0.36		
2/13/20 15:36	20.97	0.05	0.17		
2/13/20 15:36	20.95	0.06	0.34		
2/13/20 15:36	20.95	0.06	0.33		
2/13/20 15:36	20.95	0.06	0.15		
2/13/20 15:37	20.95	0.06	0.34		
2/13/20 15:37	20.95	0.06	0.37		
2/13/20 15:37	20.95	0.06	0.35		
2/13/20 15:37	20.95	0.06	0.17		
2/13/20 15:38	20.95	0.05	0.33		
2/13/20 15:38	20.95	0.05	0.33		
2/13/20 15:38	20.95	0.05	0.14		
2/13/20 15:38	20.94	0.05	0.33		
2/13/20 15:39	20.94	0.05	0.36		
2/13/20 15:39	20.94	0.04	0.34		
2/13/20 15:39	20.94	0.04	0.17		
2/13/20 15:39	20.94	0.04	0.33		
2/13/20 15:40	20.93	0.04	0.32		
2/13/20 15:40	20.93	0.04	0.14		
2/13/20 15:40	20.93	0.03	0.33		
2/13/20 15:40	20.93	0.03	0.35		
2/13/20 15:41	20.93	0.03	0.34		
2/13/20 15:41	20.92	0.03	0.16		
2/13/20 15:41	20.92	0.03	0.32		
2/13/20 15:41	20.08	0.02	0.32		
2/13/20 15:42	19.66	-0.02	0.26		
2/13/20 15:42	0.74	-0.03	0.37		
2/13/20 15:42	0.09	-0.03	0.74		
2/13/20 15:42	7.76	4.22	8.09		
2/13/20 15:43	11.92	4.23	14.51		
2/13/20 15:43	12.04	4.13	16.87		
2/13/20 15:43	12.05	4.10	17.17		
2/13/20 15:43	12.11	4.20	17.37		
2/13/20 15:44	12.14	4.21	18.02	**M206 Gas**	
2/13/20 15:44	**12.12**	**4.22**	**18.14**		
2/13/20 15:44	**12.07**	**4.03**	**18.08**	**O2**	**12.09**
2/13/20 16:44	**12.08**	**4.03**	**17.93**	**CO2**	**4.08**
2/13/20 16:45	**12.08**	**4.03**	**18.09**	**CO**	**18.06**
2/13/20 15:45	12.08	3.98	17.55		
2/13/20 15:45	12.05	3.97	17.50		
2/13/20 15:45	12.02	3.96	17.46		
2/13/20 15:46	11.99	3.95	17.41		
2/13/20 15:46	11.96	3.94	17.37		
2/13/20 15:46	11.93	3.93	17.33		
2/13/20 15:46	11.90	3.92	17.28		
2/13/20 15:47	11.87	3.91	17.24		
2/13/20 15:47	18.21	8.52	8.88		
2/13/20 15:47	1.14	0.07	3.02		
2/13/20 15:47	0.11	0.03	0.79	**Zero N2**	
2/13/20 15:48	**0.07**	**0.03**	**0.44**		
2/13/20 15:48	**0.08**	**0.02**	**0.38**	**O2**	**0.06**
2/13/20 15:48	**0.05**	**0.01**	**0.24**	**CO2**	**0.02**
2/13/20 15:48	**0.05**	**0.02**	**0.41**	**CO**	**0.37**
2/13/20 15:49	0.04	0.00	0.32		
2/13/20 15:49	5.61	18.92	-0.09		
2/13/20 15:49	21.31	21.21	-0.44		
2/13/20 15:49	22.15	22.06	-0.48	**22.4% O2**	
2/13/20 15:50	**22.45**	22.35	-0.70		
2/13/20 15:50	**22.48**	22.36	-0.67		
2/13/20 15:50	**22.32**	22.23	-0.61		
2/13/20 15:50	**22.47**	22.37	-0.49	**O2**	**22.42**
2/13/20 15:51	22.52	22.42	-0.54		
2/13/20 15:51	17.06	16.99	-0.40		
2/13/20 15:51	10.27	10.22	-0.34		
2/13/20 15:51	10.08	10.04	-0.33	**10% O2/10% CO2**	
2/13/20 15:52	**10.06**	**10.02**	-0.22		
2/13/20 15:52	**10.06**	**10.02**	-0.23		
2/13/20 15:52	**10.05**	**10.01**	-0.11	**O2**	**10.05**

RM FIELD DATA

Client	Medline Waukegan
Location	Weukegen, Illinois
Source	ETO Abatement System Common Steck and Inlets #2 and #3
Date	02/13/20

Chennel No:	0	1	4		
Units	% v db	% v db	ppm v db		
Time	**O2**	**CO2**	**CO**	**COMMENTS**	
2/13/20 15:52	**10.04**	**10.00**	-0.16	**CO2**	**10.01**
2/13/20 15:53	10.05	10.01	-0.21		
2/13/20 15:53	10.02	9.97	-0.15		
2/13/20 15:53	5.15	5.13	-0.14	**5% O2/ 5.0% CO2**	
2/13/20 15:53	**5.04**	**5.02**	-0.07		
2/13/20 15:54	**5.04**	**5.02**	0.03		
2/13/20 15:54	**5.04**	**5.02**	0.12	**O2**	**5.04**
2/13/20 15:54	**5.05**	**5.03**	0.05	**CO2**	**5.02**
2/13/20 15:54	5.04	5.02	-0.07		
2/13/20 15:55	4.73	0.74	1.77		
2/13/20 15:55	0.60	0.12	23.29		
2/13/20 15:55	0.14	0.07	41.43		
2/13/20 15:55	0.10	0.05	27.85	**30 ppm CO**	
2/13/20 15:56	0.09	0.04	**30.44**		
2/13/20 15:56	0.05	0.04	**30.37**		
2/13/20 15:56	0.04	0.04	**30.89**		
2/13/20 15:56	0.03	0.02	**30.59**	**CO**	**30.52**
2/13/20 15:57	0.03	0.02	30.82		
2/13/20 15:57	0.03	0.02	30.67		
2/13/20 15:57	0.03	0.02	15.56	**15 ppm CO**	
2/13/20 15:57	0.02	0.02	**14.96**		
2/13/20 15:58	0.02	0.03	**14.79**		
2/13/20 15:58	0.03	0.02	**14.69**		
2/13/20 15:58	0.02	0.02	**14.82**	**CO**	**14.82**
2/13/20 15:58	0.03	0.02	14.99		
2/13/20 15:59	0.04	0.03	13.10		
2/13/20 15:59	0.04	0.03	12.96		
2/13/20 15:59	0.04	0.03	12.83		
2/13/20 15:59	0.04	0.03	12.70		
2/13/20 16:00	0.04	0.03	12.57		
2/13/20 16:00	0.04	0.03	12.44		
2/13/20 16:00	9.73	11.48	9.98		
2/13/20 16:00	11.99	11.54	7.77	**12.04% O2**	
2/13/20 16:01	**12.09**	11.52	1.96		
2/13/20 16:01	**12.10**	11.54	0.52		
2/13/20 16:01	**12.10**	11.53	0.15		
2/13/20 16:01	**12.10**	11.53	0.02	**O2**	**12.10**
2/13/20 16:02	12.10	5.91	-0.02		
2/13/20 16:02	6.14	5.96	0.11	**6.0 % O2**	
2/13/20 16:02	**6.01**	5.95	0.02		
2/13/20 16:02	**6.01**	5.96	0.00		
2/13/20 16:03	**6.01**	5.97	0.14		
2/13/20 16:03	**6.01**	5.98	0.13	**O2**	**6.01**
2/13/20 16:03	6.03	5.97	0.15		
2/13/20 16:03	6.01	3.93	5.15		
2/13/20 16:04	4.06	4.07	4.35	**3.95% CO2**	
2/13/20 16:04	4.02	**3.97**	1.43		
2/13/20 16:04	4.02	**3.98**	0.53		
2/13/20 16:04	4.02	**3.96**	0.24		
2/13/20 16:05	4.02	**3.97**	0.11	**CO2**	**3.97**
2/13/20 16:05	4.02	3.97	0.18		
2/13/20 16:05	2.21	2.12	0.12		
2/13/20 16:05	2.02	2.01	0.13	**2.0% CO2**	
2/13/20 16:06	2.02	**2.01**	0.21		
2/13/20 16:06	2.01	**2.01**	0.25		
2/13/20 16:06	2.02	**2.02**	0.21		
2/13/20 16:06	2.01	**2.02**	0.35	**CO2**	**2.01**
2/13/20 16:07	2.02	2.02	0.24		
2/13/20 16:07	1.65	0.17	0.24		
2/13/20 16:07	0.69	0.62	4.76		
2/13/20 16:07	0.17	0.07	18.10		
2/13/20 16:08	0.03	0.03	9.01	**10 ppm CO**	
2/13/20 16:08	0.03	0.05	**9.99**		
2/13/20 16:08	0.04	0.06	**9.94**		
2/13/20 16:08	0.04	0.06	**9.99**		
2/13/20 16:09	0.04	0.09	**9.99**	**CO**	**9.97**
2/13/20 16:09	0.04	0.10	10.11		
2/13/20 16:09	0.04	0.11	16.81		
2/13/20 16:09	0.04	0.13	21.65		
2/13/20 16:10	0.04	0.15	19.36	**18.28 ppm CO**	
2/13/20 16:10	0.05	0.17	**19.26**		
2/13/20 16:10	0.05	0.18	**19.25**		

RM FIELD DATA

Client	Medline Waukegan
Location	Waukegan, Illinois
Source	ETO Abatement System Common Stack and Inlets #2 and #3
Data	02/13/20

Channel No:	0	1	4		
Units	% v db	% v db	ppm v db		
Time	**O2**	**CO2**	**CO**	**COMMENTS**	
2/13/20 16:10	0.05	0.20	**18.26**		
2/13/20 16:11	0.06	0.20	**18.26**	**CO**	**18.26**
2/13/20 16:11	0.05	0.22	18.27		
2/13/20 16:11	0.33	0.19	18.21		
2/13/20 16:11	0.03	0.02	18.06		
2/13/20 16:12	0.04	0.04	18.10		
2/13/20 16:12	0.01	0.01	9.19		
2/13/20 16:12	0.01	0.01	2.73		
2/13/20 16:12	0.00	0.01	0.90		
2/13/20 16:13	0.01	0.01	0.46		
2/13/20 16:13	0.01	0.15	8.77		
2/13/20 16:13	10.43	4.02	16.38		
2/13/20 16:13	11.93	3.90	17.78	**M205 Ges**	
2/13/20 16:14	**11.95**	**3.89**	**18.29**		
2/13/20 16:14	**11.97**	**3.98**	**18.17**	**O2**	**12.00**
2/13/20 16:14	**12.04**	**4.04**	**18.17**	**CO2**	**3.99**
2/13/20 16:14	**12.05**	**4.04**	**18.12**	**CO**	**18.19**
2/13/20 16:15	12.05	4.04	18.18		
2/13/20 16:15	12.07	4.04	17.76		
2/13/20 16:15	11.96	3.88	15.82		
2/13/20 16:15	12.23	11.51	7.56		
2/13/20 16:16	12.15	11.56	2.13		
2/13/20 16:16	12.15	11.53	0.25		
2/13/20 16:16	12.13	11.51	-0.06		
2/13/20 16:16	12.14	11.51	-0.19	**12.04% O2**	
2/13/20 16:17	**12.14**	11.52	-0.16		
2/13/20 16:17	**12.14**	11.53	-0.11		
2/13/20 16:17	**12.13**	11.53	-0.14		
2/13/20 16:17	**12.13**	11.53	-0.15	**O2**	**12.14**
2/13/20 16:18	12.14	11.56	-0.20		
2/13/20 16:18	12.14	11.58	-0.18		
2/13/20 16:18	12.14	11.59	-0.09		
2/13/20 16:18	6.60	6.00	-0.14	**6.0 % O2**	
2/13/20 16:19	**6.05**	6.00	-0.08		
2/13/20 16:19	**6.04**	5.99	0.05		
2/13/20 16:19	**6.04**	6.00	0.19		
2/13/20 16:19	**6.04**	5.99	-0.01	**O2**	**6.04**
2/13/20 16:20	5.79	4.01	4.87		
2/13/20 16:20	4.06	4.08	3.66		
2/13/20 16:20	4.04	3.99	1.14	**3.95% CO2**	
2/13/20 16:20	4.03	**3.97**	0.45		
2/13/20 16:21	4.04	**3.97**	0.26		
2/13/20 16:21	4.02	**3.96**	0.16		
2/13/20 16:21	4.04	**3.93**	0.12	**CO2**	**3.96**
2/13/20 16:21	4.04	3.93	0.16		
2/13/20 16:22	4.03	3.96	0.10		
2/13/20 16:22	4.03	3.97	0.16		
2/13/20 16:22	4.04	3.96	0.01		
2/13/20 16:22	4.03	3.95	0.14		
2/13/20 16:23	3.18	2.41	0.09	**2.0% CO2**	
2/13/20 16:23	2.06	**2.00**	0.13		
2/13/20 16:23	2.04	**2.00**	0.23		
2/13/20 16:23	2.04	**2.00**	0.17		
2/13/20 16:24	2.02	**2.00**	0.31	**CO2**	**2.00**
2/13/20 16:24	2.03	2.00	0.23		
2/13/20 16:24	2.02	2.00	0.27		
2/13/20 16:24	2.04	2.00	0.31		
2/13/20 16:25	2.01	0.47	0.22		
2/13/20 16:25	0.68	0.68	3.57		
2/13/20 16:25	0.21	0.07	17.17		
2/13/20 16:25	0.05	0.04	16.73		
2/13/20 16:26	0.04	0.03	9.56	**10 ppm CO**	
2/13/20 16:26	0.03	0.03	**9.90**		
2/13/20 16:26	0.03	0.03	**9.93**		
2/13/20 16:26	0.03	0.02	**9.94**		
2/13/20 16:27	0.04	0.02	**9.93**	**CO**	**9.92**
2/13/20 16:27	0.02	0.03	9.77		
2/13/20 16:27	0.03	0.02	6.06		
2/13/20 16:27	0.02	0.02	20.98		
2/13/20 16:28	0.02	0.02	19.19	**18.29 ppm CO**	
2/13/20 16:28	0.03	0.03	**18.02**		
2/13/20 16:28	0.02	0.02	**17.99**		

RM FIELD DATA

Client	Medline Waukegan
Location	Waukegan, Illinois
Source	ETO Abatement System Common Stack and Inlets #2 and #3
Date	02/13/20

Channel No:	0	1	4		
Units	% v db	% v db	ppm v db		
Time	O2	CO2	CO	COMMENTS	
2/13/20 16:28	0.02	0.02	**17.88**		
2/13/20 16:29	0.03	0.02	**17.98**	**CO**	**18.00**
2/13/20 16:29	0.03	0.02	17.98		
2/13/20 16:29	0.03	0.02	18.94		
2/13/20 16:29	0.05	0.02	25.92		
2/13/20 16:30	8.73	4.01	26.76		
2/13/20 16:30	11.91	3.99	21.75	**M205 Gas**	
2/13/20 16:30	**12.01**	**3.87**	**18.02**		
2/13/20 16:30	**12.03**	**4.00**	**18.05**	**O2**	**12.05**
2/13/20 16:31	**12.07**	**4.04**	**18.06**	**CO2**	**4.01**
2/13/20 16:31	**12.07**	**4.04**	**18.18**	**CO**	**18.08**
2/13/20 16:31	12.07	4.05	18.10		
2/13/20 16:31	12.07	4.05	17.99		
2/13/20 16:32	12.08	4.05	17.90		
2/13/20 16:32	12.09	4.04	18.08		
2/13/20 16:32	12.16	9.33	13.59		
2/13/20 16:32	12.24	11.53	5.40		
2/13/20 16:33	12.16	11.54	1.27	**12.04% O2**	
2/13/20 16:33	**12.17**	11.53	0.13		
2/13/20 16:33	**12.16**	11.51	0.04		
2/13/20 16:33	**12.17**	11.52	-0.02		
2/13/20 16:34	**12.16**	11.53	-0.23	**O2**	**12.17**
2/13/20 16:34	12.16	11.53	-0.17		
2/13/20 16:34	12.16	11.53	-0.11		
2/13/20 16:34	12.16	6.60	0.00		
2/13/20 16:35	6.21	5.98	0.07		
2/13/20 16:35	6.06	5.98	-0.05	**6.0 % O2**	
2/13/20 16:35	**6.06**	5.98	0.00		
2/13/20 16:35	**6.05**	5.98	0.17		
2/13/20 16:36	**6.06**	5.98	0.08		
2/13/20 16:36	**6.05**	5.98	0.09	**O2**	**6.05**
2/13/20 16:36	6.04	5.98	0.00		
2/13/20 16:36	6.05	5.98	4.87		
2/13/20 16:37	4.27	4.06	4.76	**3.95% CO2**	
2/13/20 16:37	4.04	**3.83**	2.21		
2/13/20 16:37	4.04	**3.83**	0.64		
2/13/20 16:37	4.04	**3.84**	0.31		
2/13/20 16:38	4.04	**3.94**	0.25	**CO2**	**3.94**
2/13/20 16:38	2.51	2.15	0.24		
2/13/20 16:38	2.06	2.06	0.16		
2/13/20 16:38	2.04	2.02	0.36	**2.0% CO2**	
2/13/20 16:39	2.04	**2.02**	0.18		
2/13/20 16:39	2.05	**2.03**	0.19		
2/13/20 16:39	2.04	**2.03**	0.45		
2/13/20 16:39	2.05	**2.03**	0.26	**CO2**	**2.03**
2/13/20 16:40	2.04	2.03	0.33		
2/13/20 16:40	2.06	2.03	0.21		
2/13/20 16:40	0.66	0.69	0.18		
2/13/20 16:40	0.62	0.27	9.86		
2/13/20 16:41	0.10	0.07	9.69		
2/13/20 16:41	0.06	0.06	9.70		
2/13/20 16:41	0.05	0.05	10.28	**10 ppm CO**	
2/13/20 16:41	0.05	0.04	**9.80**		
2/13/20 16:42	0.05	0.04	**8.80**		
2/13/20 16:42	0.04	0.04	**9.78**		
2/13/20 16:42	0.04	0.04	**8.77**	**CO**	**9.81**
2/13/20 16:42	0.04	0.03	9.76		
2/13/20 16:43	0.05	0.04	10.19		
2/13/20 16:43	0.03	0.04	14.19		
2/13/20 16:43	0.04	0.04	19.96		
2/13/20 16:43	0.04	0.03	19.03	**18.28 ppm CO**	
2/13/20 16:44	0.04	0.03	**18.58**		
2/13/20 16:44	0.04	0.04	**18.77**		
2/13/20 16:44	0.04	0.03	**18.24**		
2/13/20 16:44	0.04	0.03	**17.94**	**CO**	**18.38**
2/13/20 16:45	0.04	0.03	17.98		
2/13/20 16:45	0.07	0.04	18.73		
2/13/20 16:45	0.11	3.44	27.22		
2/13/20 16:45	11.37	4.04	24.73		
2/13/20 16:46	12.04	3.94	20.22	**M205 Gas**	
2/13/20 16:46	**12.06**	**3.96**	**17.92**		
2/13/20 16:46	**12.07**	**3.84**	**17.90**	**O2**	**12.08**

RM FIELD DATA

Client	Medline Waukegan
Location	Waukegan, Illinois
Source	ETO Abatement System Common Stack and Inlets #2 and #3
Date	02/13/20

Channel No:	0	1	4		
Units	% v db	% v db	ppm v db		
Time	**O2**	**CO2**	**CO**		**COMMENTS**
2/13/20 16:46	**12.09**	**3.95**	**18.13**	**CO2**	**3.95**
2/13/20 16:47	**12.09**	**3.96**	**17.99**	**CO**	**17.99**
2/13/20 16:47	12.09	3.96	18.00		
2/13/20 16:47	12.09	3.95	17.96		

Interference Response

Analyzer Type: Oxygen (O_2)
Manufacturer: Servomex
Detector Type: Paramagnetic
Model No.: 1440
Serial No.: 1420C/2765
Calibration Span (%): 11.27

Test Gas	Test Gas Conc.	High Standard			Zero			Maximum % Interference
		O_2 without interferent	O_2 with interferent	% Interference	Zero without interferent	Zero with interferent	% Interference	
NH_3	10 ppm	11.27	11.27	0.00	0.03	0.01	0.18	0.18
SO_2	20 ppm	11.25	11.25	0.00	0.01	0.01	0.00	0.00
CH_4	50 ppm	11.24	11.25	0.09	0.02	0.04	-0.18	0.18
CO	50 ppm	11.23	11.24	0.09	0.00	0.01	-0.09	0.09
CO_2	5%	11.23	11.26	0.27	0.00	-0.01	0.09	0.27
CO_2	12.55%	11.25	11.27	0.18	0.03	-0.02	0.44	0.44
NO_2	15 ppm	11.22	11.24	0.18	0.01	0.00	0.09	0.18
NO_x	15 ppm	11.22	11.25	0.27	0.01	0.01	0.00	0.27
H_2	1,020 ppm	11.24	11.23	-0.09	0.02	0.01	0.09	0.09
HCl	10 ppm	11.29	11.31	0.18	0.00	-0.01	0.09	0.18

Sum of the highest absolute value obtained with and without the pollutant present: 1.88 %
Allowable interference response: 2.5 %

Certification Date: 8/9/2006
Operator:

Interference Response

Analyzer Type:	Carbon Dioxide (CO_2)
Manufacturer:	Servomex
Detector Type:	NDIR
Model No.:	1440
Serial No.:	1415C
Calibration Span (%):	11.41

Test Gas	Test Gas Conc.	High Standard			Zero			Maximum % Interference
		CO_2 without interferent	CO_2 with interferent	% Interference	Zero without interferent	Zero with interferent	% Interference	
NH_3	10 ppm	11.41	11.39	-0.18	0.01	0.01	0.00	0.18
SO_2	20 ppm	11.37	11.37	0.00	0.01	0.01	0.00	0.00
CH_4	50 ppm	11.37	11.37	0.00	0.01	0.01	0.00	0.00
CO	50 ppm	11.41	11.41	0.00	0.01	0.01	0.00	0.00
NO_2	15 ppm	11.37	11.37	0.00	0.01	0.01	0.00	0.00
NO_x	15 ppm	11.37	11.37	0.00	0.01	0.01	0.00	0.00
H_2	1,020 ppm	11.37	11.37	0.00	0.01	0.01	0.00	0.00
HCl	10 ppm	11.41	11.38	-0.26	0.01	0.01	0.00	0.26

Sum of the highest absolute value obtained with and without the pollutant present: 0.44 %
Allowable interference response: 2.5 %

Certification Date: 8/9/2006
Operator: [signature]

PRAXAIR
Making our planet more productive

DocNumber: 253489

Praxair Distribution, Inc.
6055 Brent Drive
Toledo OH 43611
Tel: +1 (419) 729-7732
Fax: +1 (419) 729-2411
PGVP ID: F12019

CERTIFICATE OF ANALYSIS / EPA PROTOCOL GAS

Customer & Order Information

PRAXAIR PKG HILLSIDE IL HS
12000 ROOSEVELT RD
HILLSIDE IL 60162-2004

Certificate Issuance Date: 06/19/2019
Praxair Order Number: 70978732
Part Number: NI CD22.5O5E-AS
Customer PO Number: 78962053

Fill Date: 05/17/2019
Lot Number: 700019137F5
Cylinder Style & Outlet: AS CGA 590
Cylinder Pressure and Volume: 2000 psig 140 ft3

Certified Concentration

ProSpec EZ Cert

Expiration Date:	06/19/2027	NIST Traceable
Cylinder Number:	EB0033448	Expanded Uncertainty
22.4 %	Carbon dioxide	± 1.3 %
22.4 %	Oxygen	± 0.1 %
Balance	Nitrogen	

Certification Information:

Certification Date: 06/19/2019 *Term:* 96 Months *Expiration Date:* 06/19/2027

This cylinder was certified according to the 2012 EPA Traceability Protocol, Document #EPA-600/R-12/531, using Procedure G2.

Do Not Use this Standard if Pressure is less than 100 PSIG.

O2 responses have been corrected for CO2 interference.

Analytical Data:

(R=Reference Standard, Z=Zero Gas, C=Gas Candidate)

1. *Component:* Carbon dioxide

Requested Concentration: 22.5 %
Certified Concentration: 22.4 %
Instrument Used: MKS 2031
Analytical Method: FTIR
Last Multipoint Calibration: 06/19/2019

First Analysis Data:			Date 06/19/2019
Z: 0	R: 11.82	C: 13.12	Conc: 22.4
R: 11.83	Z: 0	C: 13.15	Conc: 22.4
Z: 0	C: 13.14	R: 11.84	Conc: 22.4
UOM: ppm		Mean Test Assay:	22.4 %

Reference Standard: Type / Cylinder #: GMIS / EB0101485
Concentration / Uncertainty: 20.17 % ±0.238%
Expiration Date: 01/13/2026
Traceable to: SRM # / Sample # / Cylinder #: PRM# 3222577.01 / n/a / FF27613
SRM Concentration / Uncertainty: 20.008% / ±0.02%
SRM Expiration Date: 04/01/2020

Second Analysis Data:			Date
Z: 0	R: 0	C: 0	Conc: 0
R: 0	Z: 0	C: 0	Conc: 0
Z: 0	C: 0	R: 0	Conc: 0
UOM: ppm		Mean Test Assay:	%

2. *Component:* Oxygen

Requested Concentration: 22.5 %
Certified Concentration: 22.4 %
Instrument Used: Servomex 575
Analytical Method: Paramagnetic
Last Multipoint Calibration: 06/10/2019

First Analysis Data:			Date 06/19/2019
Z: 0	R: 22.5	C: 22.4	Conc: 22.4
R: 22.5	Z: 0	C: 22.4	Conc: 22.4
Z: 0	C: 22.4	R: 22.5	Conc: 22.4
UOM: %		Mean Test Assay:	22.4 %

Reference Standard: Type / Cylinder #: GMIS / CC243760
Concentration / Uncertainty: 22.5 % ±0.1%
Expiration Date: 11/17/2025
Traceable to: SRM # / Sample # / Cylinder #: 2659a / 71-D-04 / CAL015785
SRM Concentration / Uncertainty: 20.72 / ±0.043%
SRM Expiration Date: 08/23/2021

Second Analysis Data:			Date
Z: 0	R: 0	C: 0	Conc: 0
R: 0	Z: 0	C: 0	Conc: 0
Z: 0	C: 0	R: 0	Conc: 0
UOM: %		Mean Test Assay:	%

Analyzed By Mike Monnette

Certified By Edward E Zucal

Information contained herein has been prepared at your request by qualified experts within Praxair Distribution, Inc. While we believe that the information is accurate within the limits of the analytical methods employed and is complete to the extent of the specific analyses performed, we make no warranty or representation as to the suitability of the use of the information for any purpose. The information is offered with the understanding that any use of the information is at the sole discretion and risk of the user. In no event shall the liability of Praxair Distribution, Inc., arising out of the use of the information contained herein exceed the fee established for providing such information.

Airgas
an Air Liquide company

Airgas Specialty Gases
Airgas USA, LLC
12722 S. Wentworth Ave.
Chicago, IL 60628
Airgas.com

CERTIFICATE OF ANALYSIS

Grade of Product: EPA Protocol

Part Number:	E04NI83E15A0023	Reference Number:	54-401407034-1
Cylinder Number:	CC173097	Cylinder Volume:	147.5 CF
Laboratory:	124 - Chicago (SAP) - IL	Cylinder Pressure:	2015 PSIG
PGVP Number:	B12019	Valve Outlet:	590
Gas Code:	CO,CO2,O2,BALN	Certification Date:	Jan 28, 2019

Expiration Date: Jan 28, 2027

Certification performed in accordance with "EPA Traceability Protocol for Assay and Certification of Gaseous Calibration Standards (May 2012)" document EPA 600/R-12/531, using the assay procedures listed. Analytical Methodology does not require correction for analytical interference. This cylinder has a total analytical uncertainty as stated below with a confidence level of 95%. There are no significant impurities which affect the use of this calibration mixture. All concentrations are on a volume/volume basis unless otherwise noted.

Do Not Use This Cylinder below 100 psig, i.e. 0.7 megapascals.

ANALYTICAL RESULTS

Component	Requested Concentration	Actual Concentration	Protocol Method	Total Relative Uncertainty	Assay Dates
CARBON MONOXIDE	18.00 PPM	18.28 PPM	G1	+/- 0.9% NIST Traceable	01/28/2019
CARBON DIOXIDE	4.000 %	3.958 %	G1	+/- 0.9% NIST Traceable	01/28/2019
OXYGEN	12.00 %	12.04 %	G1	+/- 1.0% NIST Traceable	01/28/2019
NITROGEN	Balance			-	

CALIBRATION STANDARDS

Type	Lot ID	Cylinder No	Concentration	Uncertainty	Expiration Date
NTRM	150102	KAL004878	24.35 PPM CARBON MONOXIDE/NITROGEN	+/- 0.3%	Sep 04, 2021
NTRM	10060138	CC308178	5.027 % CARBON DIOXIDE/NITROGEN	+/- 0.4%	Dec 02, 2021
NTRM	98051019	SG9168269BAL	12.05 % OXYGEN/NITROGEN	+/- 0.7%	Dec 14, 2023

ANALYTICAL EQUIPMENT

Instrument/Make/Model	Analytical Principle	Last Multipoint Calibration
CO2-1 HORIBA VIA-510 V1E3H7P5	NDIR	Jan 09, 2019
CO-1 SIEMENS ULTRAMAT 6E N1J5700	NDIR	Jan 17, 2019
O2-1 HORIBA MPA-510 3VUYL9NR	Paramagnetic	Jan 21, 2019

Triad Data Available Upon Request

Signature on file
Approved for Release

PRAXAIR

Praxair Distribution, Inc,
6055 Brent Drive
Toledo, OH 43611
Tel: (419) 729-7732 Fax:(419) 729-2411
PGVP ID: F12016

DocNumber: 000017313

CERTIFICATE OF ANALYSIS / EPA PROTOCOL GAS

Customer & Order Information:

PRAXAIR PKG HILLSIDE IL HS
12000 ROOSEVELT RD
HILLSIDE IL 60162

Praxair Order Number: 70103811
Customer P. O. Number:
Customer Reference Number:

Fill Date: 8/22/2016
Part Number: NI CO900E-AS
Lot Number: 0822GC16
Cylinder Style & Outlet: AS CGA 350
Cylinder Pressure & Volume: 2000 psig 140 cu. ft

Certified Concentration:

Expiration Date:		**8/26/2024**	NIST Traceable
Cylinder Number:		**EB0019274**	Analytical Uncertainty:
907	**ppm**	**CARBON MONOXIDE**	± 0.3 %
	Balance	**NITROGEN**	

Certifcation Information: *Certification Date:* 8/26/2016 *Term:* 96 Months *Expiration Date:* 8/26/2024

This cylinder was certified according to the 2012 EPA Traceability Protocol, Document #EPA-600/R-12/531, using Procedure G1.
Do Not Use this Standard if Pressure is less than 100 PSIG.

Analytical Data: *(R=Reference Standard, Z=Zero Gas, C=Gas Candidate)*

1. **Component:** CARBON MONOXIDE

Requested Concentration: 900 ppm
Certified Concentration: 907 ppm
Instrument Used: Horiba VA-3000
Analytical Method: NDIR
Last Multipoint Calibration: 8/23/2016

Reference Standard Type: GMIS
Ref. Std. Cylinder # : DT0005038
Ref. Std. Conc: 1035 PPM
Ref. Std. Traceable to SRM # : 1681B
SRM Sample # : 1-K-42
SRM Cylinder # : CAL015913

First Analysis Data:						Date:	8/26/2016
Z:	0	R:	1037	C:	909	Conc:	907.25
R:	1037	Z:	0	C:	909	Conc:	907.25
Z:	0	C:	909	R:	1037	Conc:	907.25
UOM:	PPM			Mean Test Assay:			907.25 PPM

Second Analysis Data:						Date:	
Z:	0	R:	0	C:	0	Conc:	0
R:	0	Z:	0	C:	0	Conc:	0
Z:	0	C:	0	R:	0	Conc:	0
UOM:	PPM			Mean Test Assay:			0 PPM

Analyzed by: Jesse Glass

Certified by: Rolonda Kaywood

Information contained herein has been prepared at your request by qualified experts within Praxair Distribution, Inc While we believe that the information is accurate within the limits of the analytical methods employed and is complete to the extent of the specific analyses performed, we make no warranty or representation as to the suitability of the use of the information for any purpose The information is offered with the understanding that any use of the information is at the sole discretion and risk of the user. In no event shall the liability of Praxair Distribution, Inc , arising out of the use of the information con tained herein exceed the fee established for providing such information

Airgas
an Air Liquide company

Airgas USA, LLC
1601 Nicholas Blvd
Elk Grove, IL 60007
Airgas.com

CERTIFICATE OF ANALYSIS

Grade of Product: PRIMARY STANDARD

Part Number:	X02NI99P15A4784	Reference Number:	136-401719947-1
Cylinder Number:	CC420194	Cylinder Volume:	144.3 CF
Laboratory:	192 - Elk Grove (SAP) - IL	Cylinder Pressure:	2015 PSIG
Analysis Date:	Jan 29, 2020	Valve Outlet:	350
Lot Number:	136-401719947-1		

Expiration Date: Jan 29, 2028

Primary Standard Gas Mixtures are traceable to N.I.S.T. weights and/or N.I.S.T. Gas Mixture reference materials.

ANALYTICAL RESULTS

Component	Req Conc	Actual Concentration (Mole %)	Analytical Uncertainty
METHANE	100.0 PPM	100.3 PPM	+/- 1%
NITROGEN	Balance		

Signature on file

Approved for Release

Airgas
an Air Liquide company

Airgas USA, LLC
6141 Easton Road
Bldg 1
Plumsteadville, PA 18949
Airgas.com

CERTIFICATE OF ANALYSIS

Grade of Product: CERTIFIED STANDARD-SPEC

Part Number:	X03NI99C15A02L8	Reference Number:	160-401719949-1
Cylinder Number:	CC717111	Cylinder Volume:	144.4 CF
Laboratory:	124 - Plumsteadville - PA	Cylinder Pressure:	2015 PSIG
Analysis Date:	Feb 10, 2020	Valve Outlet:	350SS
Lot Number:	160-401719949-1		

Expiration Date: Feb 10, 2021

Product composition verified by direct comparison to calibration standards traceable to N.I.S.T. weights and/or N.I.S.T. Gas Mixture reference materials.

ANALYTICAL RESULTS

Component	Req Conc	Actual Concentration (Mole %)	Analytical Uncertainty
ETHYLENE OXIDE	2.000 PPM	2.286 PPM	+/- 5%
ETHANE	500.0 PPM	513.9 PPM	+/- 2%
NITROGEN	Balance		

Notes: PO number: PO1045833

Signature on file
Approved for Release

Calibration complies with ISO/IEC 17025, ANSI/NCSL Z540-1, and 9001

ilac-MRA ACCREDITED A2LA Certificate No. 1750.01 Calibration

Cert. No.: 4004-10676590

Traceable® Certificate of Calibration for Big-Digit Type K Thermometer

Manufactured for and distributed by : Cole-Parmer Instrument Company 625 East Bunker Court,Vernon Hills,IL,60061,U.S.A.

Instrument Identification:

Model: 91210-07, S/N: 192447554 Manufacturer: Control Company

Standards/Equipment:

Description	Serial Number	Due Date	NIST Traceable Reference
Thermocouple Simulator	3648011	10 Dec 2019	EVL504523

Certificate Information:

Technician: 177 Procedure: CAL-4004 Cal Date: 03 Sep 2019 Cal Due Date: 03 Sep 2021

Test Conditions: 56.34%RH 22.74°C 1013mBar

Calibration Data: (New Instrument)

Unit(s)	Nominal	As Found	In Tol	Nominal	As Left	In Tol	Min	Max	±U	TUR
°C	N.A.	N.A.		-40.0	-39.6	Y	-41.2	-38.8	0.13	>4:1
°C	N.A.	N.A.		0.0	0.3	Y	-1	1	0.13	>4:1
°C	N.A.	N.A.		100.0	100.2	Y	98.7	101.3	0.13	>4:1
°C	N.A.	N.A.		600.0	599.9	Y	597.2	602.8	0.13	>4:1
°C	N.A.	N.A.		1200.0	1199	Y	1193	1207	0.16	>4:1

This certificate indicates Traceability to standards provided by (NIST) National Institute of Standards and Technology and/or a National Standards Laboratory.

A Test Uncertainty Ratio of at least 4:1 is maintained unless otherwise stated and is calculated using the expanded measurement uncertainty. Uncertainty evaluation includes the instrument under test and is calculated in accordance with the ISO "Guide to the Expression of Uncertainty in Measurement : (GUM). The uncertainty represents an expanded uncertainty using a coverage factor k=2 to approximate a 95% confidence level. In tolerance conditions are based on test results falling within specified limits with no reduction by the uncertainty of the measurement. The results contained herein relate only to the item calibrated. This certificate shall not be reproduced except in full, without written approval of Control Company.

Nominal=Standard's Reading; As Left=Instrument's Reading; In Tol=In Tolerance; Min/Max=Acceptance Range; ± U=Expanded Measurement Uncertainty; TUR=Test Uncertainty Ratio; Accuracy=±(Max-Min)/2; Min=As Left Nominal(Rounded) – Tolerance; Max= As Left Nominal(Rounded) + Tolerance;

Nicol Rodriguez

Nicol Rodriguez, Quality Manager

Aaron Judice, Technical Manager

Note :

Maintaining Accuracy:

In our opinion once calibrated your Big-Digit Type K Thermometer should maintain its accuracy. There is no exact way to determine how long calibration will be maintained. Big-Digit Type K Thermometer change little, if any at all, but can be affected by aging, temperature, shock, and contamination.

Recalibration:

For factory calibration and re-certification traceable to National Institute of Standards and Technology contact Control Company.

CONTROL COMPANY 12554 Galveston RD Suite B230 Webster TX USA 77598
Phone 281 482-1714 Fax 281 482-9448 sales@control3.com www.control3.com

Control Company is an ISO/IEC 17025:2005 Calibration Laboratory Accredited by (A2LA) American Association for Laboratory Accreditation, Certificate No. 1750.01.
Control Company is ISO 9001:2008 Quality Certified by DNV GL, Certificate No. CERT-01805-2006-AQ-HOU-ANAB.
International Laboratory Accreditation Cooperation (ILAC) - Multilateral Recognition Arrangement (MRA).

Traceable® is a registered trademark of Control Company

© 2017 Control Company

03/16/2020

MONTROSE AIR QUALITY SERVICES

Pitot Tube Inspection Data

Client Name: Medline-Waukegan, IL

	Pre-Test		Post-Test
Date:	2/5/2020	**Date:**	3/16/2020

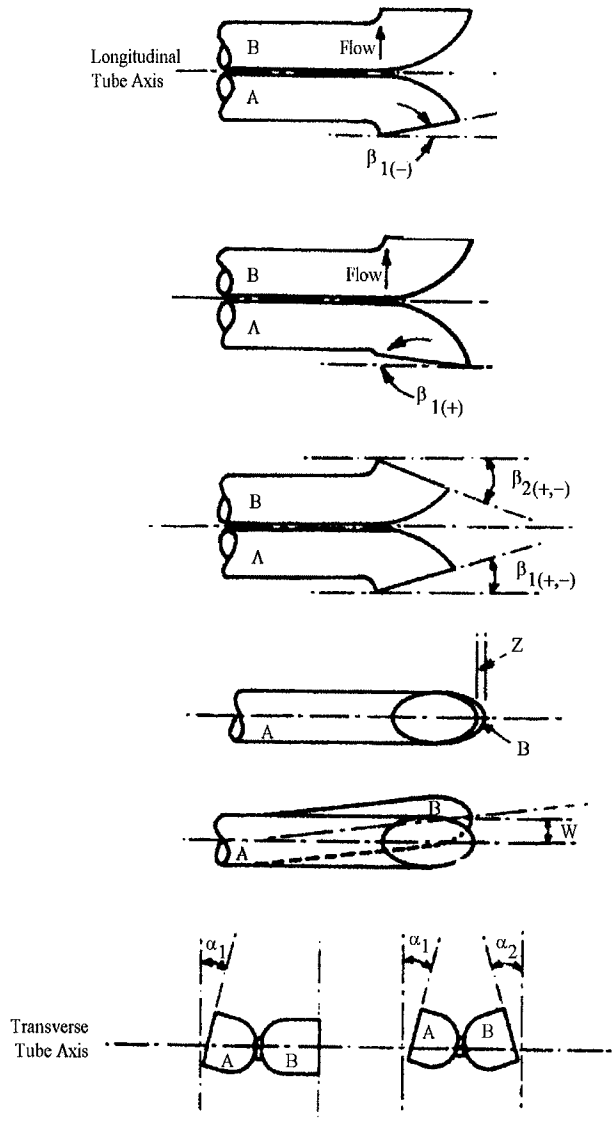

Y	**level?**	Y
N	**obstructions?**	N
N	**damaged?**	N
2	**$-10° < a_1 < +10°$**	2
3	**$-10° < a_2 < +10°$**	3
0	**$-5° < b_1 < +5°$**	0
0	**$-5° < b_2 < +5°$**	0
3	**γ**	3
1	**Θ**	2
0.690	**A**	0.690
0.345	**$0.2625 < P_A < 0.375$**	0.345
0.345	**$0.2625 < P_B < 0.375$**	0.345
0.250	**$0.1875 \leq D_t \leq 0.375$**	0.250
0.036	**A tan g < 0.125"**	0.036
0.01204	**A tan q < 0.03125"**	0.02409
TRUE	**$P_A = P_B$ +/- 0.063**	TRUE
PASS	**PASS/FAIL**	PASS

Comments: 6' M2 S-type pitot with 1/4" tips and a K type thermouple

Pitot tube/probe number 703 meets or exceeds all specifications and criteria and/or applicable design features (per 40CFR60 Appendix A; Method 2) and is heareby assigned a pitot tube calibration factor of 0.84.

CAL-SPITOT-WORKBOOK-200T-REV1

Signature:

Date: 03/16/2020

MONTROSE

Thermocouple Calibration Data Form

Thermocouple ID: 703
Calibrator: N. Sekulic
Reference Thermometer: Fluke 51 SN40430089WS

	Pretest	Post-test
Date:	2/5/2020	3/16/2020
Barometric:	29.27	29.47

	Reference Point	Reference Source	NIST Traceable Thermometer Temp. (F)	Working Thermocouple Temp. (F)	Difference (%)
Pre-Test	T.C	Ice Water	33.8	34.2	-0.08
		Ambient	70.3	69.3	0.19
		Heat Source	296.1	297.3	-0.16

	Reference Point	Reference Source	Reference Thermometer Temp. (F)	Working Thermocouple Temp. (F)	Difference (%)
Post-Test	T.C	Ice Water	34.3	34.1	0.04
		Ambient	68.4	69.6	-0.23
		Heat Source	293.9	295.5	-0.21

a (temp. diff.) = (ref.temp + 460) - (Thermo. temp. + 460) / (ref. temp. +460) x 100
Where $-1.5 < a < 1.5$

Signature [signature]
Date 03/16/2020

CAL-T/C-TEMPLATE-201T-REV2

Meter Console Thermometer Pretest Calibration Data Form

MONTROSE AIR QUALITY SERVICES

Meter Box: 808024
Calibrator: NS
Date: 10/29/2019
Barometric: 29.36
Ambient Temp: 61
Reference Thermometer: Altek Thermocouple Source

CAL-MASTERMETER-WORKBOOK-203T-REV1

Reference Temperature Altek	Thermometer Temperature Inlet	Difference (%) mean Inlet	Thermometer Temperature Outlet	Difference (%) mean Outlet	Thermometer Temperature Probe	Difference (%) mean Probe
0		0.00	1	0.22	1	0.22
100		-17.86	100	0.00	100	0.00
200		-30.30	201	0.15	201	0.15
300		-39.47	300	0.00	300	0.00
400		-46.51	398	-0.23	398	-0.23
500		-52.08	498	-0.21	498	-0.21

Reference Temperature Altek	Thermometer Temperature Filter	Difference (%) mean Filter	Thermometer Temperature Exit	Difference (%) mean Exit	Thermometer Temperature Aux	Difference (%) mean Aux
0	1	0.22	1	0.22	1	0.22
100	100	0.00	100	0.00	100	0.00
200	201	0.15	201	0.15	201	0.15
300	300	0.00	300	0.00	300	0.00
400	398	-0.23	398	-0.23	398	-0.23
500	498	-0.21	498	-0.21	498	-0.21

Reference Temperature Altek	Thermometer Temperature Stack	Difference (%) mean Stack
0	1	0.22
200	201	0.15
400	398	-0.23
600	599	-0.09
800	800	0.00
1000	1000	0.00

Reference Temperature Altek	Thermometer Temperature Stack	Difference (%) mean Stack
1200	1198	-0.12
1400	1398	-0.11
1600	1600	0.00
1800	1799	-0.04

Revised 10/03

Meter Console Thermometer Post-Test Calibration Data Form

MONTROSE AIR QUALITY SERVICES

Meter Box: 808024
Calibrator: NS
Date: 3/16/2020
Barometric: 29.38
Ambient Temp: 66
Reference Thermometer: Altek Thermocouple Source

CAL-MASTERMETER-WORKBOOK-203T-REV1

Reference Temperature Altek	Thermometer Temperature Oven	Difference (%) mean Inlet	Thermometer Temperature Outlet	Difference (%) mean Outlet	Thermometer Temperature Probe	Difference (%) mean Probe
0			1	0.22	1	0.22
100			100	0.00	100	0.00
200			202	0.30	202	0.30
300			302	0.26	302	0.26
400			398	-0.23	398	-0.23
500			498	-0.21	498	-0.21

Reference Temperature Altek	Thermometer Temperature Filter	Difference (%) mean Filter	Thermometer Temperature Exit	Difference (%) mean Exit	Thermometer Temperature Aux	Difference (%) mean Aux
0	1	0.22	1	0.22	1	0.22
100	100	0.00	100	0.00	100	0.00
200	202	0.30	202	0.30	202	0.30
300	302	0.26	302	0.26	302	0.26
400	398	-0.23	398	-0.23	398	-0.23
500	498	-0.21	498	-0.21	498	-0.21

Reference Temperature Altek	Thermometer Temperature Stack	Difference (%) mean Stack
0	1	0.22
200	201	0.15
400	398	-0.23
600	601	0.09
800	803	0.24
1000	1003	0.21

Reference Temperature Altek	Thermometer Temperature Stack	Difference (%) mean Stack
1200	1201	0.06
1400	1400	0.00
1600	1601	0.05
1800	1802	0.09

Revised 10/03

APPENDIX G
TEST PROGRAM QUALIFICATIONS

STAC STACK TESTING ACCREDITATION COUNCIL

A2LA American Association for Laboratory Accreditation

Accredited Air Emission Testing Body

A2LA has accredited

MONTROSE AIR QUALITY SERVICES

In recognition of the successful completion of the joint A2LA and Stack Testing Accreditation Council (STAC) evaluation process, this laboratory is accredited to perform testing activities in compliance with ASTM D7036:2004 - Standard Practice for Competence of Air Emission Testing Bodies.

Presented this 11th day of February 2020.

Vice President, Accreditation Services
For the Accreditation Council
Certificate Number 3925.01
Valid to February 28, 2022

This accreditation program is not included under the A2LA ILAC Mutual Recognition Arrangement.

SOURCE EVALUATION SOCIETY

Qualified Source Testing Individual

LET IT BE KNOWN THAT

WILLIAM C. JAMES

HAS SUCCESSFULLY PASSED A COMPREHENSIVE EXAMINATION AND SATISFIED EXPERIENCE REQUIREMENTS IN ACCORDANCE WITH THE GUIDELINES ISSUED BY THE SES QUALIFIED SOURCE TEST INDIVIDUAL REVIEW BOARD FOR

GASEOUS POLLUTANTS INSTRUMENTAL SAMPLING METHODS

ISSUED THIS 6TH DAY OF MARCH 2019 AND EFFECTIVE UNTIL MARCH 5TH, 2024

Peter R. Westlin, QSTI/QSTO Review Board

Peter S. Pakainis, QSTI/QSTO Review Board

Tina Sanderson, QSTI/QSTO Review Board

J. Wade Bice, QSTI/QSTO Review Board

Karen D. Kajiya-Mills , QSTI/QSTO Review Board

Bruce Randall QSTI/QSTO Review Board

CERTIFICATE NO. 2009-303

CERTIFICATE OF COMPLETION

Craig James

This document certifies that this individual has passed a comprehensive examination and is now a Qualified Individual (QI) as defined in Section 8.3 of ASTM D7036-04 for the following method(s):

EPA Method 205

Certificate Number: 024-2016-02

DATE OF ISSUE: 7/21/16

DATE OF EXPIRATION: 7/21/21

Tate Strickler, Accreditation Director

MONTROSE ENVIRONMENTAL

CERTIFICATE OF COMPLETION

Craig James

This document certifies that this individual has passed a comprehensive examination and is now a Qualified Individual (QI) as defined in Section 8.3 of ASTM D7036-04 for the following method(s):

EPA Method 320

Certificate Number: 024-2016-03

DATE OF ISSUE: 7/21/16

DATE OF EXPIRATION: 7/21/21

Tate Strickler, Accreditation Director

MONTROSE ENVIRONMENTAL

CERTIFICATE OF COMPLETION

William James

This document certifies that this individual has passed a comprehensive examination and is now a Qualified Individual (QI) as defined in Section 8.3 of ASTM D7036-04 for the following method(s):

ASTM Method D6348-12

Certificate Number: 024-2018-45

Tate Strickler, Accreditation Director

DATE OF ISSUE: 12/13/18

DATE OF EXPIRATION: 12/13/23

MONTROSE ENVIRONMENTAL

SOURCE EVALUATION SOCIETY

Qualified Source Testing Individual

LET IT BE KNOWN THAT

DONALD L. CHAPMAN

HAS SUCCESSFULLY PASSED A COMPREHENSIVE EXAMINATION AND SATISFIED EXPERIENCE REQUIREMENTS IN ACCORDANCE WITH THE GUIDELINES ISSUED BY THE SES QUALIFIED SOURCE TEST INDIVIDUAL REVIEW BOARD FOR

MANUAL GAS VOLUME MEASUREMENTS AND ISOKINETIC PARTICULATE SAMPLING METHODS

ISSUED THIS 31ST DAY OF JANUARY 2018 AND EFFECTIVE UNTIL JANUARY 30TH, 2023

Peter R. Westlin, QSTI/QSTO Review Board

J. Wade Bice, QSTI/QSTO Review Board

Peter S. Pakalnis, QSTI/QSTO Review Board

Karen D. Kajiya-Mills , QSTI/QSTO Review Board

Theresa Lowe, QSTI/QSTO Review Board

Bruce Randell QSTI/QSTO Review Board

CERTIFICATE NO. 2008-141

SOURCE EVALUATION SOCIETY

Qualified Source Testing Individual

LET IT BE KNOWN THAT

DONALD L. CHAPMAN

HAS SUCCESSFULLY PASSED A COMPREHENSIVE EXAMINATION AND SATISFIED EXPERIENCE REQUIREMENTS IN ACCORDANCE WITH THE GUIDELINES ISSUED BY THE SES QUALIFIED SOURCE TEST INDIVIDUAL REVIEW BOARD FOR

MANUAL GASEOUS POLLUTANTS SOURCE SAMPLING METHODS

ISSUED THIS 1ST DAY OF FEBRUARY 2018 AND EFFECTIVE UNTIL JANUARY 31ST, 2023

Peter R. Westlin, QSTI/QSTO Review Board

J. Wade Bice, QSTI/QSTO Review Board

Peter S. Pakalnis, QSTI/QSTO Review Board

Karen D. Kajiya-Mills , QSTI/QSTO Review Board

Theresa Lowe, QSTI/QSTO Review Board

Bruce Randall QSTI/QSTO Review Board

CERTIFICATE NO. 2008-141

SOURCE EVALUATION SOCIETY

Qualified Source Testing Individual

LET IT BE KNOWN THAT

DONALD L. CHAPMAN

HAS SUCCESSFULLY PASSED A COMPREHENSIVE EXAMINATION AND SATISFIED EXPERIENCE REQUIREMENTS IN ACCORDANCE WITH THE GUIDELINES ISSUED BY THE SES QUALIFIED SOURCE TEST INDIVIDUAL REVIEW BOARD FOR

GASEOUS POLLUTANTS INSTRUMENTAL SAMPLING METHODS

ISSUED THIS 31ST DAY OF JANUARY 2018 AND EFFECTIVE UNTIL JANUARY 30TH, 2023

Peter R. Westlin, QSTI/QSTO Review Board

J. Wade Bice, QSTI/QSTO Review Board

Peter S. Pakalnis, QSTI/QSTO Review Board

Karen D. Kajiya-Mills , QSTI/QSTO Review Board

Theresa Lowe, QSTI/QSTO Review Board

Bruce Randall QSTI/QSTO Review Board

CERTIFICATE NO. 2008-141

SOURCE EVALUATION SOCIETY

Qualified Source Testing Individual

LET IT BE KNOWN THAT

DONALD L. CHAPMAN

HAS SUCCESSFULLY PASSED A COMPREHENSIVE EXAMINATION AND SATISFIED EXPERIENCE REQUIREMENTS IN ACCORDANCE WITH THE GUIDELINES ISSUED BY THE SES QUALIFIED SOURCE TEST INDIVIDUAL REVIEW BOARD FOR

HAZARDOUS METALS MEASUREMENT METHODS

ISSUED THIS 6TH DAY OF FEBRUARY 2018 AND EFFECTIVE UNTIL FEBRUARY 5TH, 2023

Peter R. Westlin, QSTI/QSTO Review Board

J. Wade Bice, QSTI/QSTO Review Board

Peter S. Pakelnis, QSTI/QSTO Review Board

Karen D. Kajiya-Mills , QSTI/QSTO Review Board

Theresa Lowe, QSTI/QSTO Review Board

Bruce Randall QSTI/QSTO Review Board

CERTIFICATE NO. 2008-141

CERTIFICATE OF COMPLETION

Don Chapman

This document certifies that this individual has passed a comprehensive examination and is now a Qualified Individual (QI) as defined in Section 8.3 of ASTM D7036-04 for the following method(s):

EPA Method 205

Certificate Number: 024-2016-05

DATE OF ISSUE: 8/17/16

DATE OF EXPIRATION: 8/17/21

Tate Strickler, Accreditation Director

MONTROSE ENVIRONMENTAL

CERTIFICATE OF COMPLETION

Don Chapman

This document certifies that this individual has passed a comprehensive examination and is now a Qualified Individual (QI) as defined in Section 8.3 of ASTM D7036-04 for the following method(s):

EPA Methods 318, 320, 321 & FTIR Protocol

Certificate Number: 024-2017-10

Tate Strickler, Accreditation Director

DATE OF ISSUE: 3/31/17

DATE OF EXPIRATION: 3/31/22

MONTROSE ENVIRONMENTAL

CERTIFICATE OF COMPLETION

Don Chapman

This document certifies that this individual has passed a comprehensive examination and is now a Qualified Individual (QI) as defined in Section 8.3 of ASTM D7036-04 for the following method(s):

EPA Method 320

Certificate Number: 024-2016-06

DATE OF ISSUE: 8/17/16

DATE OF EXPIRATION: 8/17/21

Tate Strickler, Accreditation Director

MONTROSE ENVIRONMENTAL

CERTIFICATE OF COMPLETION

Donald Chapman

This document certifies that this individual has passed a comprehensive examination and is now a Qualified Individual (QI) as defined in Section 8.3 of ASTM D7036-04 for the following method(s):

ASTM D6348-12

Certificate Number: 024-2018-34

Tate Strickler, Accreditation Director

DATE OF ISSUE: 7/26/18

DATE OF EXPIRATION: 7/26/23

MONTROSE ENVIRONMENTAL

CERTIFICATE OF COMPLETION

Jeremy Clark

This document certifies that this individual has passed a comprehensive examination and is now a Qualified Individual (QI) as defined in Section 8.3 of ASTM D7036-04 for the following method(s):

Source Evaluation Society Group 1: *EPA Manual Gas Volume and Flow Measurements and Isokinetic Particulate Sampling Methods*

Certificate Number: 024-2017-21

Tate Strickler, Accreditation Director

DATE OF ISSUE: 3/11/17

DATE OF EXPIRATION: 3/11/22

MONTROSE ENVIRONMENTAL

CERTIFICATE OF COMPLETION

Jeremy Clark

This document certifies that this individual has passed a comprehensive examination and is now a Qualified Individual (QI) as defined in Section 8.3 of ASTM D7036-04 for the following method(s):

Source Evaluation Society Group 2: *EPA Manual Gaseous Pollutants Source Sampling Methods*

Certificate Number: 024-2017-22

Tate Strickler, Accreditation Director

DATE OF ISSUE: 3/11/17

DATE OF EXPIRATION: 3/11/22

MONTROSE ENVIRONMENTAL

CERTIFICATE OF COMPLETION

Jeremy Clark

This document certifies that this individual has passed a comprehensive examination and is now a Qualified Individual (QI) as defined in Section 8.3 of ASTM D7036-04 for the following method(s):

Source Evaluation Society Group 3: *EPA Gaseous Pollutants Instrumental Methods*

Certificate Number: 024-2017-41

Tate Strickler, Accreditation Director

DATE OF ISSUE: 7/15/17

DATE OF EXPIRATION: 7/15/22

MONTROSE ENVIRONMENTAL

CERTIFICATE OF COMPLETION

Jeremy Clark

This document certifies that this individual has passed a comprehensive examination and is now a Qualified Individual (QI) as defined in Section 8.3 of ASTM D7036-04 for the following method(s):

EPA Method 205

Certificate Number: 024-2018-31

Tate Strickler, Accreditation Director

DATE OF ISSUE: 6/29/18

DATE OF EXPIRATION: 6/29/23

MONTROSE ENVIRONMENTAL

CERTIFICATE OF COMPLETION

Jeremy Clark

This document certifies that this individual has passed a comprehensive examination and is now a Qualified Individual (QI) as defined in Section 8.3 of ASTM D7036-04 for the following method(s):

EPA Method 320

Certificate Number: 024-2018-1

Tate Strickler, Accreditation Director

DATE OF ISSUE: 1/3/18

DATE OF EXPIRATION: 1/3/23

MONTROSE ENVIRONMENTAL

CERTIFICATE OF COMPLETION

Jeremy Clark

This document certifies that this individual has passed a comprehensive examination and is now a Qualified Individual (QI) as defined in Section 8.3 of ASTM D7036-04 for the following method(s):

ASTM D6348-12

Certificate Number: 024-2018-36

Tate Strickler, Accreditation Director

DATE OF ISSUE: 7/30/18

DATE OF EXPIRATION: 7/30/23

MONTROSE ENVIRONMENTAL

SOURCE EVALUATION SOCIETY

Qualified Source Testing Observer

LET IT BE KNOWN THAT

HENRY M. TAYLOR

HAS SUCCESSFULLY PASSED A COMPREHENSIVE EXAMINATION AND SATISFIED EXPERIENCE REQUIREMENTS IN ACCORDANCE WITH THE GUIDELINES ISSUED BY THE SES QUALIFIED SOURCE TEST INDIVIDUAL REVIEW BOARD FOR

MANUAL GAS VOLUME MEASUREMENTS AND ISOKINETIC PARTICULATE SAMPLING METHODS

ISSUED THIS 7TH DAY OF JANUARY 2020 AND EFFECTIVE UNTIL JANUARY 6TH, 2025

Peter R. Westlin, QSTI/QSTO Review Board

Peter S. Pakalnis, QSTI/QSTO Review Board

Tina Sanderson, QSTI/QSTO Review Board

J. Wade Bice, QSTI/QSTO Review Board

Karen D. Kajiya-Mills , QSTI/QSTO Review Board

Bruce Randall QSTI/QSTO Review Board

CERTIFICATE NO. 2015-872

SOURCE EVALUATION SOCIETY

Qualified Source Testing Observer

LET IT BE KNOWN THAT

HENRY M. TAYLOR

HAS SUCCESSFULLY PASSED A COMPREHENSIVE EXAMINATION AND SATISFIED EXPERIENCE REQUIREMENTS IN ACCORDANCE WITH THE GUIDELINES ISSUED BY THE SES QUALIFIED SOURCE TEST INDIVIDUAL REVIEW BOARD FOR

MANUAL GASEOUS POLLUTANTS SOURCE SAMPLING METHODS

ISSUED THIS 28TH DAY OF JANUARY 2020 AND EFFECTIVE UNTIL JANUARY 27TH, 2025

Peter R. Westlin, QSTI/QSTO Review Board

J. Wade Bice, QSTI/QSTO Review Board

Peter S. Pakalnis, QSTI/QSTO Review Board

Karen D. Kajiya-Mills , QSTI/QSTO Review Board

Tina Sanderson, QSTI/QSTO Review Board

Bruce Randall QSTI/QSTO Review Board

CERTIFICATE NO. 2015-872

SOURCE EVALUATION SOCIETY

Qualified Source Testing Observer

LET IT BE KNOWN THAT

HENRY M. TAYLOR

HAS SUCCESSFULLY PASSED A COMPREHENSIVE EXAMINATION AND SATISFIED EXPERIENCE REQUIREMENTS IN ACCORDANCE WITH THE GUIDELINES ISSUED BY THE SES QUALIFIED SOURCE TEST OBSERVER REVIEW BOARD FOR

GASEOUS POLLUTANTS INSTRUMENTAL SAMPLING METHODS

ISSUED THIS 11TH DAY OF MARCH 2017 AND EFFECTIVE UNTIL MARCH 10TH, 2022

Peter R. Westlin, QSTI/QSTO Review Board

J. Wade Bice, QSTI/QSTO Review Board

Peter S. Pakalnis, QSTI/QSTO Review Board

Karen D. Kajiya-Mills , QSTI/QSTO Review Board

Theresa Lowe, QSTI/QSTO Review Board

Bruce Randall QSTI/QSTO Review Board

CERTIFICATE NO. 2015-872

THIS IS THE LAST PAGE OF THIS DOCUMENT

If you have any questions, please contact one of the following individuals by email or phone.

Name: Mr. William Craig James
Title: Vice President, Technical
Email: wjames@montrose-env.com
Phone: 847-487-1580 Ext. 12419

Name: Mr. Steve Flaherty
Title: Midwest District Manager
Email: sflaherty@montrose-env.com
Phone: 847-487-1580 Ext. 12417